Building connections that last™

ASC Engineered Solutions

Sharpe® Series 54

ASME Class 150, Flanged, Standard Port, Ball Valve Datasheet

1" – 8"

SHARPE®
An ASC Engineered Solution

ASME Class 150, Flanged, Standard Port, Ball Valves

Sharpe® Series 54

Design Features

ASME B16.34 Design
Standard port, Uni-body design meets all the requirements of ASME B16.34 for Class 150 ball valves.

Blow-Out Proof Stem
The internal entry stem is machined with a heavy shoulder to prevent blowout.

Anti-Static Configuration
Anti-static devices are included at two points on the valve stem to provide continuous ball-to-stem and stem-to-body grounding, to prevent build-up of static charge in the valve.

Live-Loaded Stem Seals
Stem seals are live-loaded using Belleville washers to provide consistent sealing forces, reducing or eliminating the need for frequent seal adjustment.

Fully Encapsulated Body Seals
Provides consistent and controlled loading of the body seal compression through a full metal-to-metal contact joint design, eliminating seal extrusion and potential body joint leakage.

Integral Mounting Pad
Ideal for actuation, ISO 5211 mounting dimensions simplify fit and alignment between valve, bracketry, and actuator. Permits easy field conversion from manual operation to actuation.

Lockable Handle
Sharpe Series 54 ball valves are supplied with lever handles designed to permit locking the valve in either the open or closed position. Sizes through 2½" are supplied with a latch engaged at open and closed positions to prevent inadvertent operation. Larger sizes have a lockable pipe handle.

Slotted Seat Design
Relief slots on the perimeter of the seats help equalize body pressure and assure leak-tight sealing.

Seats and Seals
Available with TFM (1 ½" - 4") and RTFE (6" and 8") seats. Stem packing and body seals are PTFE.

Floating Ball Design
Precision engineered and machined solid stainless steel ball with relief hole in the stem slot prevents build-up of cavity pressure while the valve is in the open position.

Material Traceability
Body and end piece casting are marked with the heat codes providing traceability to the chemical analysis and material test reports performed at the foundry. CMTR's (Certified Material Test Reports) are available upon request.

NACE
NACE MR-0175

ASME Class 150, Flanged, Standard Port, Ball Valves

Sharpe® Series 54

Parts & Materials 1" – 4"

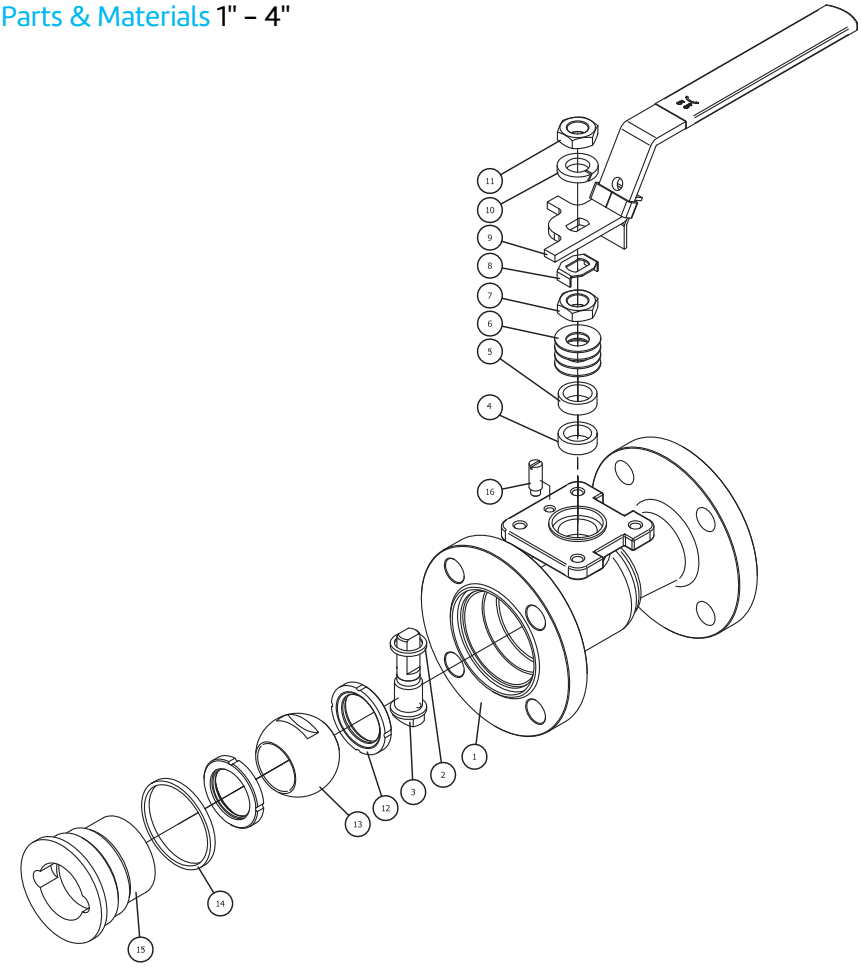

1" – 2 1/2"

No.	Part Name	Material	Qty.
1	Body	Carbon Steel ASTM A216 WCB 316 Stainless Steel ASTM A351 CF8M	1
2	Thrust Bearing	PTFE	1
3	Stem	316 Stainless Steel	1
3A	Anti-Static Devic	Located on Stem, not shown	
	Ball	300 Series Stainless Steel	2
	Spring	Hard Drawn Stainless	2
4	Stem Packing	RTFE	1
5	Packing Gland	300 Series Stainless Steel	1
6	Belleville Washer	300 Series Stainless Steel	4
7	Gland Nut	300 Series Stainless Steel	1

No.	Part Name	Material	Qty.
8	Lock Tab	300 Series Stainless Steel	1
9	Handle	300 Series Stainless Steel	1
10	Handle Washer	300 Series Stainless Steel	1
11	Handle, Nut	300 Series Stainless Steel	1
12	Seat	TFM	2
13	Ball	316 Stainless Steel	1
14	Body Seal	RTFE	1
15	End Cap	Carbon Steel ASTM A216 WCB 316 Stainless Steel ASTM A351 CF8M	1
16	Stop Pin	300 Series Stainless Steel	1

ASME Class 150, Flanged, Standard Port, Ball Valves

Sharpe® Series 54

Parts & Materials 1" – 4"

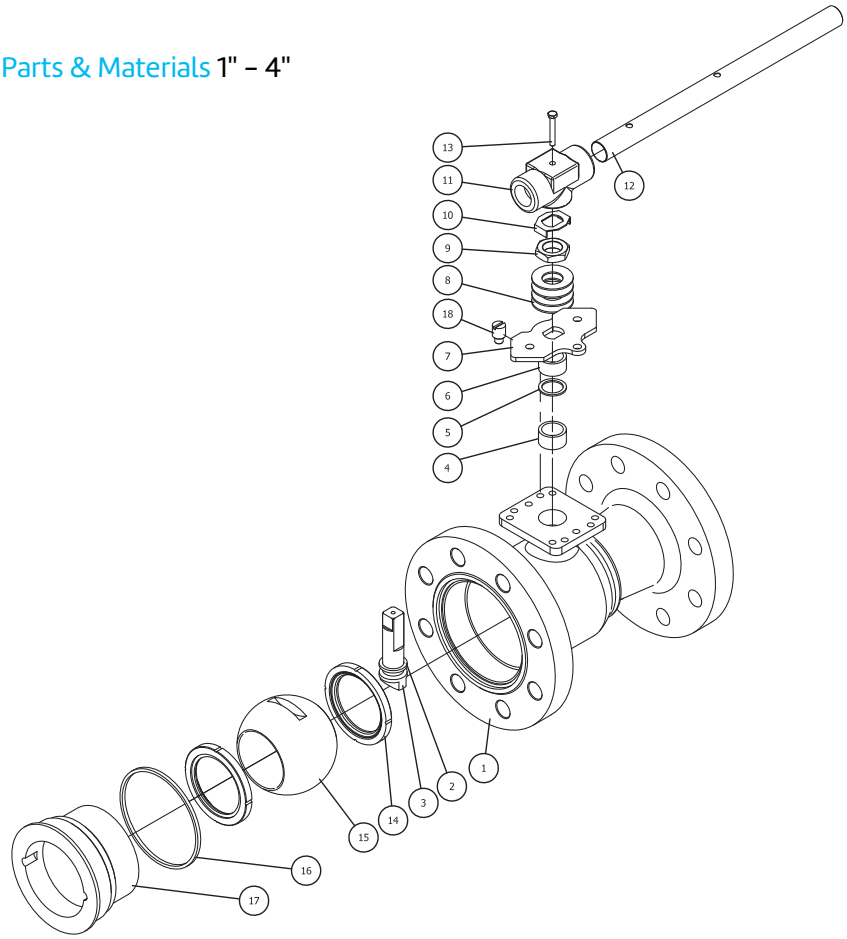

3" – 4"

No.	Part Name	Material	Qty.
1	Body	Carbon Steel ASTM A216 WCB 316 Stainless Steel ASTM A351 CF8M	1
2	Thrust Bearing	PTFE	1
3	Stem	316 Stainless Steel	1
3A	Anti-Static Devic	Located on Stem, not shown	
	Ball	300 Series Stainless Steel	2
	Spring	Hard Drawn Stainless	2
4	Stem Packing	RTFE	1
5	Plain Washer	300 Series Stainless Steel	1
6	Packing Gland	300 Series Stainless Steel	1
7	Stop Plate	300 Series Stainless Steel	1
8	Belleville Washer	300 Series Stainless Steel	4

No.	Part Name	Material	Qty.
9	Gland Nut	300 Series Stainless Steel	1
10	Lock Tab	300 Series Stainless Steel	1
11	Wrench Block	300 Series Stainless Steel	1
12	Handle, Pipe	Galvanized Steel	1
13	Handle, Bolt	300 Series Stainless Steel	1
14	Seat	TFM	2
15	Ball	316 Stainless Steel	1
16	Body Seal	RTFE	1
17	End Cap	Carbon Steel ASTM A216 WCB 316 Stainless Steel ASTM A351 CF8M	1
18	Stop Pin	300 Series Stainless Steel	1

ASME Class 150, Flanged, Standard Port, Ball Valves

Sharpe® Series 54

Parts & Materials 6" – 8"

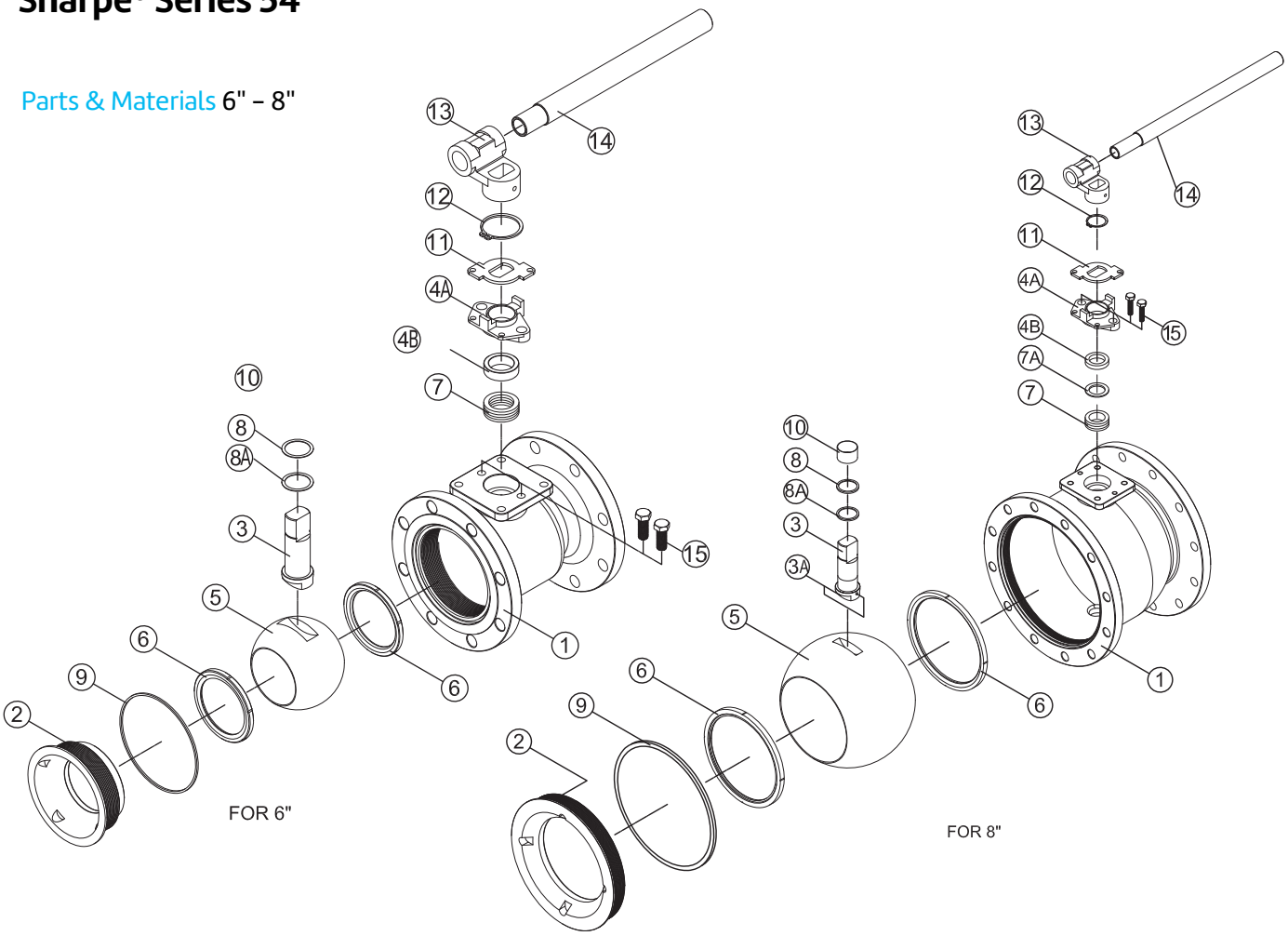

No.	Part Name	Material	Qty.
1	Body	Carbon Steel ASTM A216 WCB 316 Stainless Steel ASTM A351 CF8M	1
2	End Cap	Carbon Steel ASTM A216 WCB 316 Stainless Steel ASTM A351 CF8M	1
3	Stem	316 Stainless Steel	1
3A	Anti-Static Devic	Located on Stem, not shown	
	Ball	300 Series Stainless Steel	2
	Spring	Hard Drawn Stainless	2
4A	Gland Flange	300 Series Stainless Steel	1
4B	Sleeve	Carbon Steel 300 Series Stainless Steel	1
5	Ball	316 Stainless Steel	1
6	Seat	RTFE	2
7	Stem Packing	PTFE	4

No.	Part Name	Material	Qty.
7A	Ring Gland (8" Only)	300 Series Stainless Steel	1
8	Thrust Bearing (6" Only)	PTFE	1
8	Thrust Bearing (8" Only)	RTFE	1
8A	Thrust Bearing	PTFE	1
9	Body Seal	PTFE	1
10	Stem Bearing (8" Only)	RTFE	1
11	Travel Stop	Zinc Plated Carbon Steel 300 Series Stainless Steel	1
12	Snap Ring	Nickel Plated Carbon Steel	1
13	Wrench Block	300 Series Stainless Steel	1
14	Handle, Pipe	Galvanized Steel	1
15	Gland Bolt	Carbon Steel 300 Series Stainless Steel	2

ASME Class 150, Flanged, Standard Port, Ball Valves

Sharpe® Series 54

1" – 2 ½"

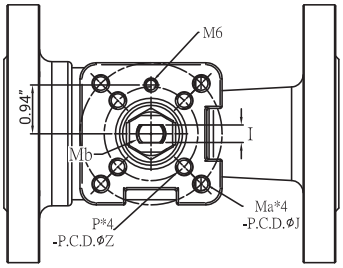

3" – 4"

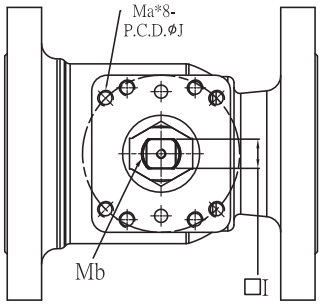

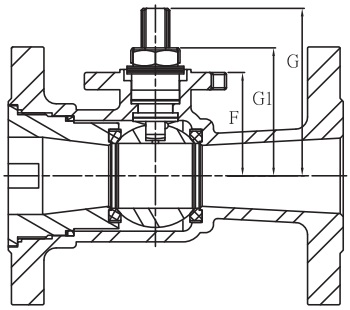

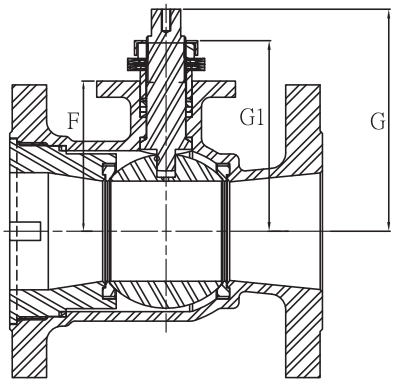

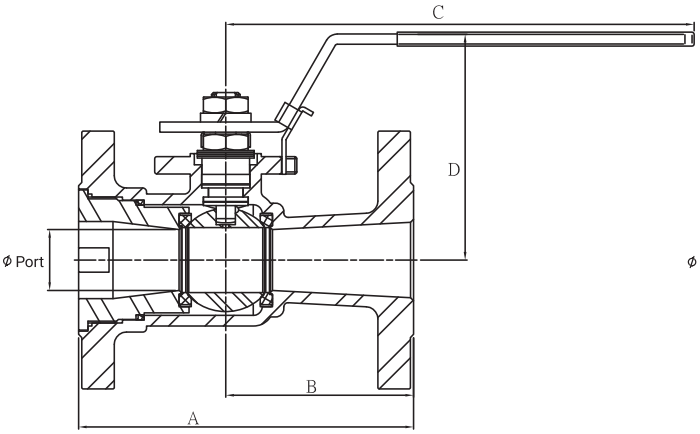

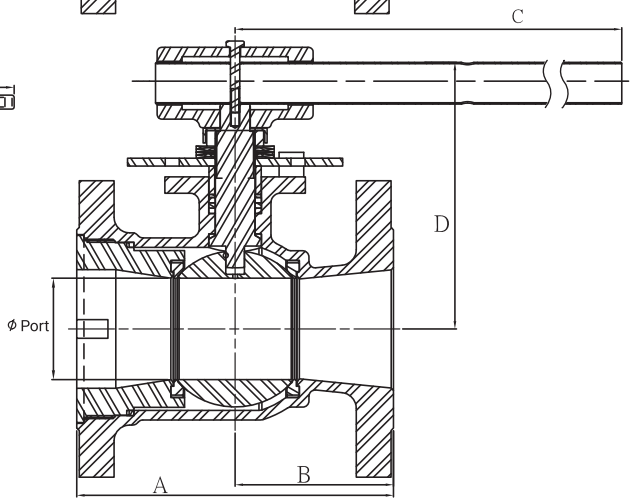

Dimensions

Size	Port	A	B	C	D	F	G	G1	I	J	Ma	P	Z	Mb
1	0.79	5.00	2.50	4.76	3.54	1.50	2.20	1.84	0.224	F05 (1.97)	M6	M5	F03 (1.42)	⅜"-24
1½	1.22	6.5	3.64	8.98	4.21	2.00	3.25	2.50	0.343	F07 (2.76)	M8	M6	F05 (1.97)	9⁄16"-18
2	1.50	7.01	4.41	8.98	4.59	2.38	3.48	2.87	0.343	F07 (2.76)	M8	M6	F05 (1.97)	9⁄16"-18
2½	1.97	7.48	3.94	8.98	4.84	2.64	3.74	3.13	0.343	F07 (2.76)	M8	M6	F05 (1.97)	9⁄16"-18
3	2.56	7.99	4.00	13.74	6.81	3.84	5.67	5.12	0.748	F10 (4.02)	M10	-	-	1"-14
4	2.99	8.98	4.49	13.74	7.28	4.28	6.10	5.51	0.748	F10 (4.02)	M10	-	-	1"-14

Note:

The dimensions above are for informational purposes only. Please contact Sharpe Valves if you need dimensions for construction.

ASME Class 150, Flanged, Standard Port, Ball Valves

Sharpe® Series 54

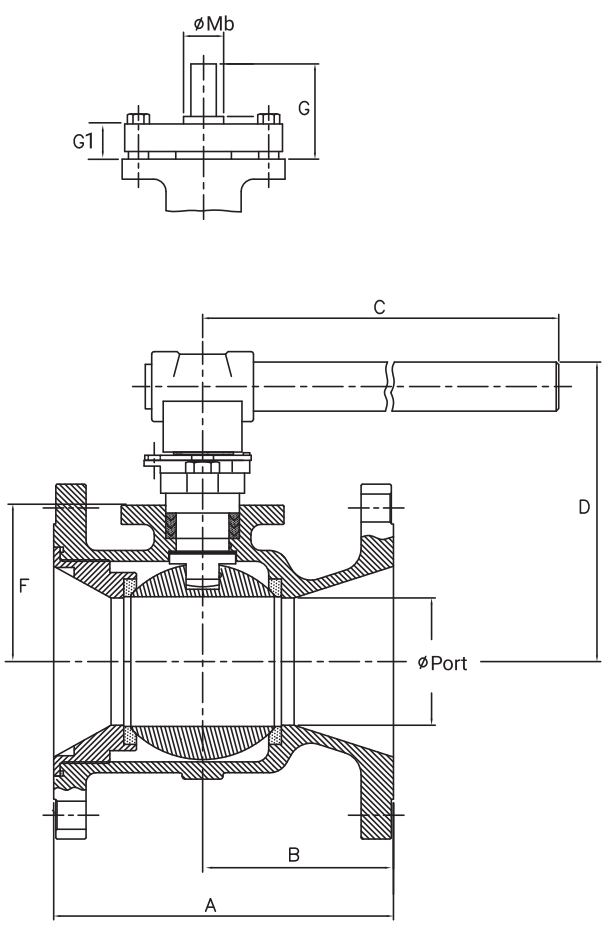

6"

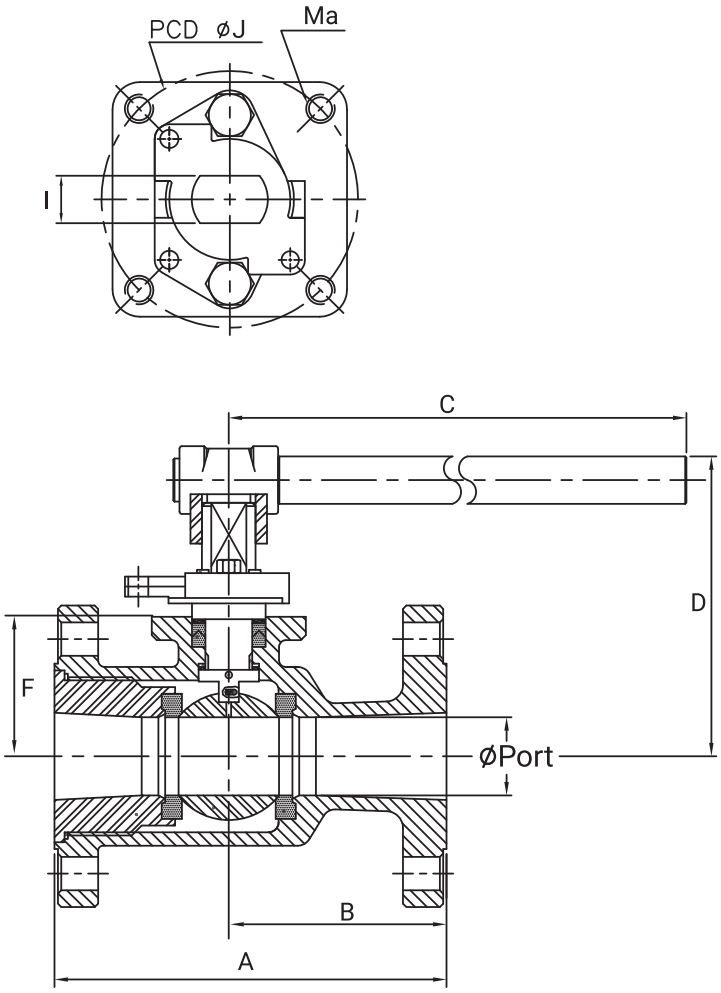

8"

Dimensions

Size	Port	A	B	C	D	F	G	G1	I	J	Ma	Mb
6	3.94	10.51	4.61	25.59	9.28	4.84	3.07	1.38	1.024	F14 (5.51)	⅝" - 11	1.63
8	5.98	11.50	5.85	37.40	11.89	6.84	3.58	1.93	1.024	F12 (4.92)	M12 X 1.75	1.71

Note:

The dimensions above are for informational purposes only. Please contact Sharpe Valves if you need dimensions for construction.

Valve Pressure – Temperature Rating

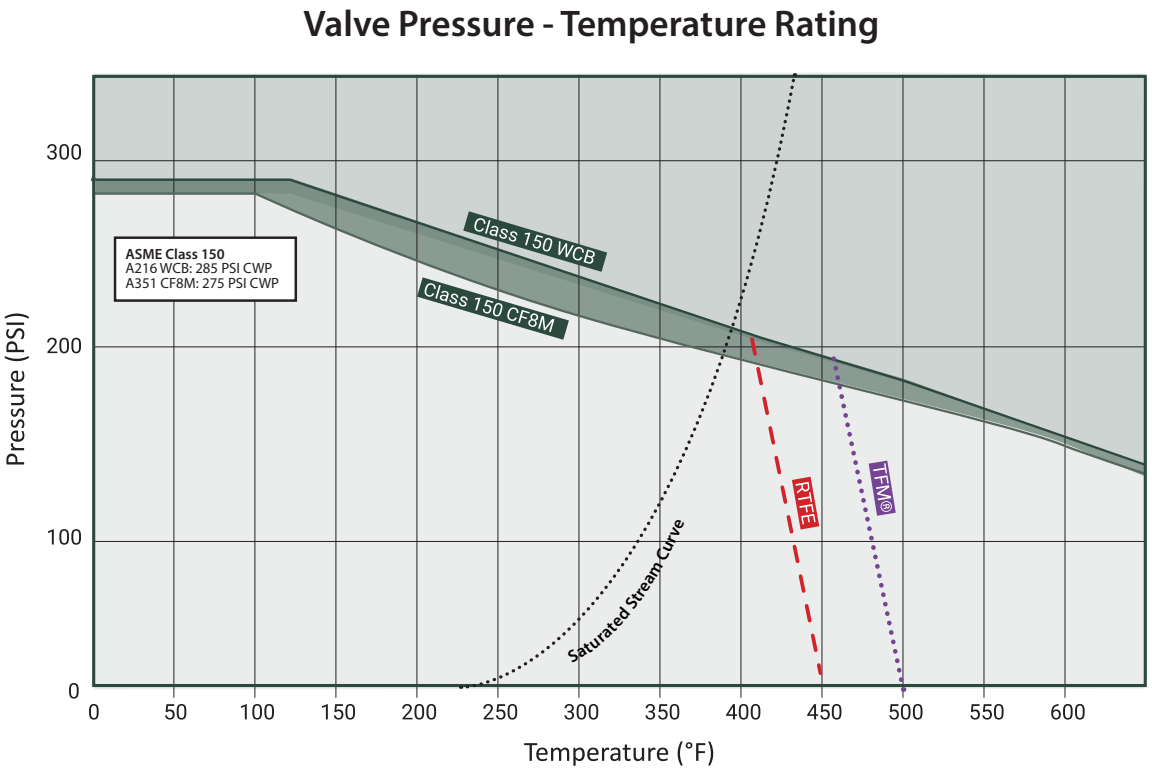

Note:

In the chart, the pressure–temperature capability of a specific valve is the region BELOW the body material line, and LEFT of the seat material line.

The valve body ratings are based on ASME B16.34 rating for materials.

The graphs are based on laboratory testing and our experience in field.

The seat ratings depend on the material, design, application and function.

Sharpe Seat Materials

TFM	**M** - TFM® PTFE Dyneon® TFM PTFE is a second generation PTFE with improved chemical and heat resistant properties and stress recovery. Its temperature range is -100°F to 500°F (-73°C to 260°C) Color - white.
RTFE	**R** - Reinforced Polytetrafluoroethylene (RTFE). PTFE's mechanical properties are enhanced by adding 15% filler material to provide improved strength, stability and wear resistance. Its temperature range is from -320°F to 450°F (-196°C to 232°C). Color-off-white.

Technical Information

Size	Cv	Weight (lbs.)
1	30	7
1-½	82	16
2	120	17
2-½	240	26
3	350	34
4	720	56
6	1020	122
8	1800	184

Applicable Standards

Wall Thickness	ASME B16.34
Face to Face Dimensions	ASME B16.10
Flange Dimensions	ASME B16.5
NACE	MR-0175
Pressure Test	ASME B16.34, API 598 (optional)
Basic Design	ASME B16.34

ASME Class 150, Flanged, Standard Port, Ball Valves

Sharpe® Series 54

How to order Sharpe® Series 54

Example: 4" 54–11–4M

4" Series 54 Standard Port, Uni–Body Flanged, Raised Face, Class 150 Ball Valve, Cast Carbon Steel Body with 316 Stainless Ball and Stem, TFM Seats, PTFE Body Seal and Stem Packing.

4"	54	–	11	–	4	M	–	
Size	Series		Class		Body Material	Seat Material		Suffixes & Options

Size	Series	Class		Body Material		Seat Material		Suffixes & Options	
1	54	11	150	4	Carbon Steel (cast WCB)	M	TFM™ (1½"- 4)	OH	Oval Handle, Non-locking up to 2"
1-½				6	Stainless Steel (cast CF8M)	R	RTFE (6"- 8")	L	Lockable Stem Extension
2									
2-½									
3									
4									
6									
8									

Note:

Responsibility for proper selection, use and maintenance of any product remains solely with the purchaser and end user.
We reserve the right to modify or improve the designs or specifications of any product at any time without notice.

About ASC Engineered Solutions

ASC Engineered Solutions is defined by quality—in its products, services and support. With nearly 2,000 employees, the company's portfolio of precision-engineered piping support, valves and connections provides products to more than 4,000 customers across industries, such as mechanical, industrial, fire protection, oil and gas, and commercial and residential construction. Its portfolio of leading brands includes ABZ Valve®, AFCON®, Anvil®, Anvil EPS, Anvil Services, Basic-PSA, Beck®, Catawissa, Cooplet®, FlexHead®, FPPI®, Gruvlok®, J.B. Smith, Merit®, North Alabama Pipe, Quadrant®, SCI®, Sharpe®, SlideLOK®, SPF®, SprinkFLEX®, Trenton Pipe and VEP. With headquarters in Oak Brook, IL, ASC also has ISO 9001:2015 certified production facilities in PA, TN, IL, TX, AL, LA, KS, and RI.