237AB

Lead Free Brass Solder Ends Swing Check Valve

Feature

125# WSP / 200# WOG
Lead free brass body
Lead free brass disc
Solder x Solder
Solder ends (ASME B16.22)
Swing check
"Y" Pattern
MSS-SP-80
AB1953, NSF/ANSI/CAN 61 & 372 certified

Meet BAA requirement

C US
NSF/ANSI 61 & 372



Pressure/ Temperature rating	
200 psi from 15 °F to 160 °F	125 psi max. at 366 °F

Material

	Part	Material	Specification
1	Body	Lead Free Brass	ASTM B927 C28500
2	Disc	Lead Free Brass	ASTM B927 C28500
3	Stem	Lead Free Brass	ASTM B927 C28500
4	Screw	Lead Free Brass	ASTM B927 C28500
5	Gasket	PTFE	PTFE
6	Cap	Lead Free Brass	ASTM B927 C28500

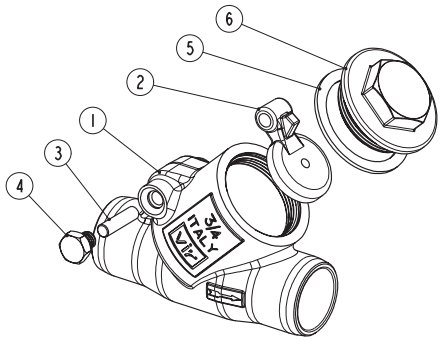

Dimension, Cv, Weight

Size	A [in]	H [in]	P [in]	Cv	Wt. L [lb]
½"	2.60	1.65	0.59	5.33	0.35
¾"	3.39	1.97	0.75	10.5	0.87
1"	4.09	2.28	0.98	19.0	1.33
1¼"	4.72	2.71	1.26	32.8	2.04
1½"	5.35	3.19	1.50	50.6	2.80
2"	6.69	3.86	1.97	88.1	4.78

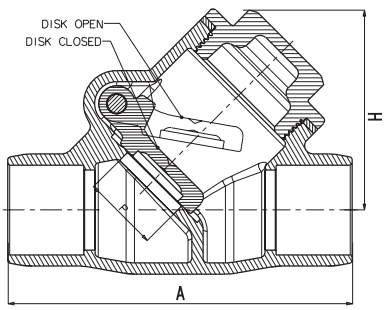

Drawings, photos and data are provided for information only and subject to change without notice. No part of this document may be reproduced, copied, modified or adapted, without the prior written consent of the copyright owner, unless otherwise indicated.
The Drinking Water Act has defined lead free as having the average wetted surface ratio of the fixture to contain less than .25% of lead per volume.
© 2018 Red-White Valve Corp. All Rights Reserved