236F

Brass Threaded Ends Swing Check Valve

Feature

125# WSP / 200# WOG
Brass body
Brass disc
FNPT x FNPT
Threaded ends (ASME B1.20.1-NPT)
Swing check
"Y" Pattern
MSS-SP-80

Meet BAA requirement



Pressure/ Temperature rating	
200 psi from 15 °F to 160 °F	125 psi max. at 366 °F

Material

	Part	Material	Specification
1	Body	Brass	ASTM B124 C37700
2	Disc	Brass	ASTM B124 C37700
3	Stem	Brass	ASTM B124 C37700
4	Screw	Brass	ASTM B124 C37700
5	Gasket	PTFE	PTFE
6	Cap	Brass	ASTM B124 C37700

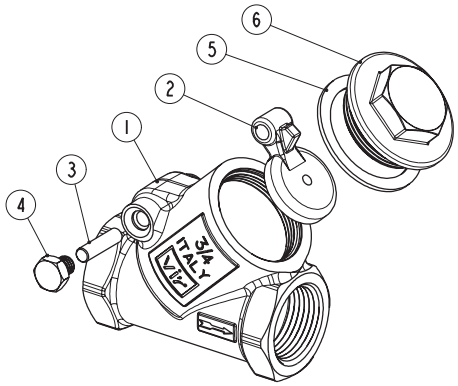

Dimension

	A [in]	H [in]	P [in]	Cv	Wt. [lb]
½"	2.21	1.65	0.59	5.33	0.58
¾"	2.76	1.97	0.75	10.5	0.92
1"	3.15	2.28	0.98	19.0	1.33
1¼"	3.78	2.71	1.26	32.8	2.23
1½"	4.33	3.19	1.50	50.6	3.24
2"	5.04	3.86	1.97	88.1	4.60

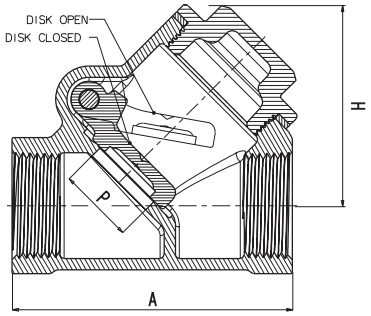

Drawings, photos and data are provided for information only and subject to change without notice. No part of this document may be reproduced, copied, modified or adapted, without the prior written consent of the copyright owner, unless otherwise indicated.

© 2018 Red-White Valve Corp. All Rights Reserved