Electronically Enhanced Solenoid Valves

Brass and Stainless Steel Bodies
1/4" - 2" NPT

2/2•3/2•4/2 SERIES Next Generation

Features

- Increase in DC pressure ratings to AC levels on all products (up to a 500% improvement)
- Lower power operation
- Voltage ranging
- Built-in surge suppression
- Elimination of AC hum
- Increase in AC and DC operating temperatures
- Low solenoid temperature rise
- Longer coil life due to lower operating temperatures and electrical surge suppression
- Solenoid approvals to UL, CSA, and CE directives
- Available with Class I, Division 2 coils (EE prefix)
- RoHS 2 Compliant



Nominal Ambient Temp. Ranges

14˚F to 140˚F (-10˚C to 60˚C)
For 8262/8263/8314 Series: -13˚F to 140˚F (-25˚C to 60˚C)

How to order

Find the valve that you are looking for in the provided specifications tables.
The tables contain the following information designed to help you in making your selection:

Pipe Size (in)	Orifice Dia. (in)	Cv Flow	Operating Pressure Differential (psi) Min.	Max. Air-Inert Gas	Max. Water	Max. Light Oil @ 300 SSU	Max Fluid Temp.˚F	Brass ①	Const. Ref.	Agency UL	Stainless Steel	Const. Ref.	Agency UL	Wattage DC	Wattage AC/DC	Approx. Shipping Weight (lbs.)
1/2	5/8	4	0	150	150	-	180	8210P094	4	❍	-	-	-	1.2	1.5	3.2

① When ordering a valve product, specify the ASCO base catalog number (Ex. **8210P094**). This number will always be 8 digits long.

Choose one of the three operating voltage ranges (100-240V/50-60Hz/DC, 24-120V/50-60Hz/DC or 12-24/DC) and add it to the base catalog number (Ex. 8210P094 **24-120V/50-60Hz/DC**).

If you want to enhance the product with one or more of the options allowed in the Optional Features Chart for that catalog number, please add the appropriate prefix or suffix (as shown):

Pipe Size (in)	Orifice Dia. (in)	Solenoid Options ② Class I, Division 2 Coil	Base Catalog Number Brass	Base Catalog Number Stainless Steel	Resilient Materials ③ NBR	FKM	EPDM	CR	Oxygen Service	PTFE	Urethane	Vacuum	Other ③ Manual Operator	Other ③ Mounting Bracket	Standard Rebuild Kit ④ Brass	Standard Rebuild Kit ④ Stainless Steel
1/2	5/8	EE	8210P094	-	●	V	E	J	N	-	-	VH	MO	MB	322670	-

② Optional Class I, Division 2 solenoid (Ex. **EE**8210P094 24-120V/50-60Hz/DC)

③ If an FKM elastomer and manual operator are required, add VMO to the back of the base catalog number. (Ex. 8210P094**VMO** 24-120V/50-60Hz/DC)

④ When ordering a rebuild kit for a valve, supply the rebuild kit number as shown in the table. (Ex. 322670) When ordering a rebuild kit for a valve with a suffix, add the suffix to the appropriate standard rebuild kit. (Ex. The rebuild kit for the above valve with FKM is 322670-V)

All constructions are available with prefix EE for Class I, Division 2 requirements.

When ordering a replacement coil, select from the following:

Voltage Range	Valve Prefix	Replacement Coil Part Number
100-240V/50-60Hz/DC	-	250404-605-*
24-120V/50-60Hz/DC	-	250404-606-*
12-24/DC	-	250404-607-*
100-240V/50-60Hz/DC	EE	250504-605-*
24-120V/50-60Hz/DC	EE	250504-606-*
12-24/DC	EE	250504-607-*

Solenoid Enclosures

Standard: Watertight, Types 1, 2, 3, 3S, 4, and 4X.

Optional: Class I, Division 2 for Hazardous Locations and Watertight, Types 3, 3S, 4, 4X. (To order, add prefix "EE" to catalog number.)

Construction & Electrical

See Engineering Section for valve parts in contact with fluids and additional electrical information.

ASCO®

2-Way Features

- Two-way (2/2) Next Generation solenoid valves have one inlet port and one outlet port
- Control of air, water, light oil, and non-corrosive media
- Normally closed (opens when energized) and normally open (closed when energized) operation
- Pipe sizes – 1/8 to 2 inch

Pipe Size (in)	Orifice Dia. (in)	Cv Flow	Operating Pressure Differential (psi) Min.	Max. Air-Inert Gas	Max. Water	Max. Light Oil @ 300 SSU	Max Fluid Temp.°F	Brass	Const. Ref.	Agency UL	Stainless Steel	Const. Ref.	Agency UL	Wattage DC	Wattage AC/DC
General Service - Normally Closed															
1/8	3/64	0.06	0	2200	2200	1700	140	-	-	-	8262R175 ⑤	1	●		
1/8	3/64	0.06	0	1500	1500	1500	140	8262R099 ⑤	1	●	-	-	-		
1/8	3/32	0.21	0	720	410	410	180	8262R277	1	❍	8262R178	1	❍		
1/8	1/8	0.35	0	540	395	360	180	8262R105	1	❍	8262R174	1	❍		
1/8	1/8	0.35	0	200	-	-	167	8262R077 ⑥	1	❍	-	-	-		
1/4	3/64	0.06	0	1500	1500	1500	140	8262R107 ⑤	2	●	-	-	-		
1/4	3/64	0.06	0	2200	2200	1700	140	-	-	-	8262R181 ⑤	2	●		
1/4	3/32	0.21	0	720	410	410	180	8262R109	2	❍	8262R183	2	❍		
1/4	1/8	0.35	0	540	395	360	180	8262R232	2	❍	8262R185	2	❍		
1/4	5/32	0.52	0	300	225	225	180	8262R202	2	❍	8262R220	2	❍		
1/4	7/32	0.73	0	125	125	125	180	8262R208	2	❍	8262R226	2	❍		
1/4	9/32	0.88	0	105	105	105	180	8262R212	2	❍	8262R230	2	❍		
1/4	9/32	1.0	0	50	-	-	167	8262R078 ⑥	2	❍	-	-	-		
1/4	5/16	1.5	10	1500	1500	1500	180	8223P025	18	-	-	-	-		
3/8	1/8	0.35	0	540	395	360	180	8263R115	3	❍	8263R191	3	❍		
3/8	5/32	0.52	0	300	225	225	180	8263R200	3	❍	8263R193	3	❍		
3/8	7/32	0.73	0	125	125	125	180	8263R124	3	❍	8263R332	3	❍	1.2 ⑧	1.5 ⑨
3/8	9/32	0.88	0	105	85	85	180	8263R210	3	❍	8263R333	3	❍		
3/8	5/16	1.5	10	1500	1500	1500	180	8223P027	18	-	-	-	-		
3/8	5/8	3	0	150	150	-	180	8210P093	4	❍	-	-	-		
3/8	5/8	3	5	300	300	300	180	8210P006	4	●	-	-	-		
1/2	3/8	3.2	25	1500	1500	1500	180	8223P003	5	-	8223P010	6	-		
1/2	5/8	4	0	150	150	-	180	8210P094	4	❍	-	-	-		
1/2	5/8	4	0	150	150	125	180	-	-	-	8210P087	7	●		
1/2	5/8	4	5	300	300	300	180	8210P007	4	❍	-	-	-		
3/4	5/8	4.5	0	150	150	125	180	-	-	-	8210P088	7	●		
3/4	3/4	5	0	150	150	-	180	8210P095	7	❍	-	-	-		
3/4	3/4	5	0	3	3	-	180	8030P003	8	❍	-	-	-		
3/4	3/4	7.8	25	750	750	750	180	8223P005	9	-	-	-	-		
1	1	13	5	150	150	100	180	8210P004	10	❍	-	-	-		
1 1/4	1 1/8	15	5	150	150	100	180	8210P008	10	❍	-	-	-		
1 1/2	1 1/4	22.5	5	150	150	100	180	8210P022	11	❍	-	-	-		
2	1 3/4	43	5	150	125	90	180	8210P100	12	●	-	-	-		
General Service - Normally Open															
1/8	3/64	0.06	0	1150	900	800	140	8262R155 ⑤	1	●	8262R168 ⑤	1	●		
1/8	3/64	0.06	0	750	750	750	180	8262R156	1	●	8262R169	1	●		
1/8	3/32	0.21	0	275	230	180	180	8262R128	1	●	8262R236	1	●		
1/8	1/8	0.35	0	160	145	125	180	8262R129	1	●	8262R237	1	●		
1/4	3/64	0.06	0	1150	900	800	140	8262R161 ⑤	2	●	8262R199 ⑤	2	●		
1/4	3/64	0.06	0	750	750	750	180	8262R260	2	●	8262R130	2	●		
1/4	3/32	0.21	0	275	230	180	180	8262R261	2	●	8262R134	2	●		
1/4	1/8	0.35	0	160	145	125	180	8262R262	2	●	8262R138	2	●		
1/4	5/32	0.54	0	90	90	70	180	8262R263	2	●	8262R142	2	●		
1/4	7/32	0.83	0	45	45	40	180	8262R264	2	●	8262R148	2	●	1.2 ⑧	1.5 ⑨
1/4	9/32	0.96	0	30	30	30	180	8262R265	2	●	8262R152	2	●		
3/8	1/8	0.35	0	160	145	125	180	8263R070	3	●	8263R080	3	●		
3/8	5/32	0.54	0	90	90	70	180	8263R071	3	●	8263R081	3	●		
3/8	7/32	0.83	0	45	45	40	180	8263R072	3	●	8263R082	3	●		
3/8	9/32	0.96	0	30	30	30	180	8263R073	3	●	8263R083	3	●		
3/8	5/8	3	0	150	150	125	180	8210P033	15	●	-	-	-		
1/2	5/8	4	0	150	150	125	180	8210P034	15	●	-	-	-		
3/4	3/4	5.5	0	150	150	125	180	8210P035	16	●	-	-	-		
3/4	3/4	5.5	0	2	2	-	180	8030P083	17	●	-	-	-		

❍ = Safety Shut-off Valve. ● = General Purpose Valve.

2-Way Specifications (Metric units)

Pipe Size (in)	Orifice Dia. (mm)	Kv Flow Factor (m^3/h)	Operating Pressure Differential (bar)				Max Fluid Temp.˚C	Brass	Const. Ref.	Agency	Stainless Steel	Const. Ref.	Agency	Wattage	
			Min.	Max.						UL			UL	DC	AC/DC
				Air-Inert Gas	Water	Light Oil @ 300 SSU									
General Service - Normally Closed															
1/8	1.2	0.05	0	152	152	117	60	-	-	-	8262R175 ⑤	1	●	1.2 ⑧	1.5 ⑨
1/8	1.2	0.05	0	103	103	103	60	8262R099 ⑤	1	●	-	-	-		
1/8	2.4	0.18	0	50	28	28	82	8262R277	1	❍	8262R178	1	❍		
1/8	3.2	0.30	0	37	27	25	82	8262R105	1	❍	8262R174	1	❍		
1/8	3.2	0.30	0	14	-	-	75	8262R077 ⑥	1	❍	-	-	-		
1/4	1.2	0.05	0	103	103	103	60	8262R107 ⑤	2	●	-	-	-		
1/4	1.2	0.05	0	152	152	117	60	-	-	-	8262R181 ⑤	2	●		
1/4	2.4	0.18	0	50	28	28	82	8262R109	2	❍	8262R183	2	❍		
1/4	3.2	0.30	0	37	27	25	82	8262R232	2	❍	8262R185	2	❍		
1/4	4.0	0.45	0	21	16	16	82	8262R202	2	❍	8262R220	2	❍		
1/4	5.6	0.63	0	9	9	9	82	8262R208	2	❍	8262R226	2	❍		
1/4	7.1	0.76	0	7	7	7	82	8262R212	2	❍	8262R230	2	❍		
1/4	7.1	0.74	0	3	-	-	75	8262R078 ⑥	2	❍	-	-	-		
1/4	7.9	1.3	.7	103	103	103	82	8223P025	18	-	-	-	-		
3/8	3.2	0.30	0	37	27	25	82	8263R115	3	❍	8263R191	3	❍		
3/8	4.0	0.45	0	21	16	16	82	8263R200	3	❍	8263R193	3	❍		
3/8	5.6	0.63	0	9	9	9	82	8263R124	3	❍	8263R332	3	❍		
3/8	7.1	0.76	0	7	6	6	82	8263R210	3	❍	8263R333	3	❍		
3/8	7.9	1.3	.7	103	103	103	82	8223P027	18	-	-	-	-		
3/8	16	2.6	0	10	10	-	82	8210P093	4	❍	-	-	-		
3/8	16	2.6	0.3	21	21	21	82	8210P006	4	●	-	-	-		
1/2	9.5	2.7	1.7	103	103	103	82	8223P003	5	-	8223P010	6	-		
1/2	16	3.4	0	10	10	-	82	8210P094	4	❍	-	-	-		
1/2	16	3.4	0	10	10	9	82	-	-	-	8210P087	7	●		
1/2	16	3.4	0.3	21	21	21	82	8210P007	4	❍	-	-	-		
3/4	16	3.9	0	10	10	9	82	-	-	-	8210P088	7	●		
3/4	19	4.3	0	10	10	-	82	8210P095	7	❍	-	-	-		
3/4	19	4.3	0	0.2	0.2	-	82	8030P003	8	❍	-	-	-		
3/4	19	6.7	1.7	52	52	52	82	8223P005	9	-	-	-	-		
1	25	11	0.3	10	10	7	82	8210P004	10	❍	-	-	-		
1 1/4	29	13	0.3	10	10	7	82	8210P008	10	❍	-	-	-		
1 1/2	32	19	0.3	10	10	7	82	8210P022	11	❍	-	-	-		
2	44	37	0.3	10	9	6	82	8210P100	12	●	-	-	-		
General Service - Normally Open															
1/8	1.20	0.05	0	79	62	55	60	8262R155 ⑤	1	●	8262R168 ⑤	1	●	1.2 ⑧	1.5 ⑨
1/8	1.20	0.05	0	52	52	52	82	8262R156	1	●	8262R169	1	●		
1/8	2.40	0.18	0	19	16	12	82	8262R128	1	●	8262R236	1	●		
1/8	3.20	0.30	0	11	10	9	82	8262R129	1	●	8262R237	1	●		
1/4	1.20	0.05	0	79	62	55	60	8262R161 ⑤	2	●	8262R199 ⑤	2	●		
1/4	1.20	0.05	0	52	52	52	82	8262R260	2	●	8262R130	2	●		
1/4	2.40	0.18	0	19	16	12	82	8262R261	2	●	8262R134	2	●		
1/4	3.20	0.30	0	11	10	9	82	8262R262	2	●	8262R138	2	●		
1/4	3.90	0.47	0	6	6	5	82	8262R263	2	●	8262R142	2	●		
1/4	5.60	0.72	0	3	3	3	82	8262R264	2	●	8262R148	2	●		
1/4	7.10	0.83	0	2	2	2	82	8262R265	2	●	8262R152	2	●		
3/8	3.20	0.30	0	11	10	9	82	8263R070	3	●	8263R080	3	●		
3/8	3.90	0.47	0	6	6	5	82	8263R071	3	●	8263R081	3	●		
3/8	5.60	0.72	0	3	3	3	82	8263R072	3	●	8263R082	3	●		
3/8	7.10	0.83	0	2	2	2	82	8263R073	3	●	8263R083	3	●		
3/8	16	2.6	0	10	10	9	82	8210P033	15	●	-	-	-		
1/2	16	3.5	0	10	10	9	82	8210P034	15	●	-	-	-		
3/4	19	4.8	0	10	10	9	82	8210P035	16	●	-	-	-		
3/4	19	4.8	0	.14	.14	-	82	8030P083	17	●	-	-	-		

❍ = Safety Shut-off Valve. ● = General Purpose Valve

ELECTRONICALLY ENHANCED

ASCO®

2-Way Optional Features Chart

Pipe Size (in)	Orifice Dia. (in)	Base Catalog Number		Resilient Materials and Suffix Options												Other		Standard Rebuild Kit	
		Brass	Stainless Steel	Ammonia ⑦	Silicone Free	Dry Air	NBR	LT NBR	FKM	EPDM	CR	Oxygen Service	PTFE ②	Urethane	Vacuum	Manual Operator	Mounting Bracket	Brass	Stainless Steel
1/8	3/64	8262R099 ⑤	8262R175 ⑤	-	SF	-	-	-	-	-	-	-	-	●	-	-	MB	323593-W	323595-W
1/8	3/64	8262R155 ⑤	8262R168 ⑤	-	SF	-	-	-	-	-	-	-	-	●	-	-	MB	323986-W	323988-W
1/8	3/64	8262R156	8262R169	NH	SF	-	●	A	V	E	J	N	T	-	-	-	MB	323986	323988
1/8	3/32	8262R277	8262R178	NH	SF	-	●	A	V	E	J	N	T	-		MS	MB	323593	323595
1/8	3/32	8262R128	8262R236	NH	SF	-	●	A	V	E	J	N	T	-	-	-	MB	323987	323989
1/8	1/8	8262R105	8262R174	NH	SF	-	●	A	V	E	J	N	T	-	VH	MS	MB	323593	323595
1/8	1/8	8262R077 ⑥	-	-	SF	-	-	●	-	-	-	-	-	-	-	-	MB	325039	-
1/8	1/8	8262R129	8262R237	NH	SF	-	●	A	V	E	J	N	T	-	VH	-	MB	323987	323989
1/4	3/64	8262R107 ⑤	8262R181 ⑤	-	SF	-	-	-	-	-	-	-	-	●	-	-	MB	323593-W	323595-W
1/4	3/64	8262R161 ⑤	8262R199 ⑤	-	SF	-	-	-	-	-	-	-	-	●	-	-	MB	323986-W	323988-W
1/4	3/64	8262R260	8262R130	NH	SF	-	●	A	V	E	J	N	T	-	-	-	MB	323986	323988
1/4	3/32	8262R109	8262R183	NH	SF	P	●	A	V	E	J	N	T	-	-	MS	MB	323593	323595
1/4	3/32	8262R261	8262R134	NH	SF	-	●	A	V	E	J	N	T	-	-	-	MB	323987	323989
1/4	1/8	8262R232	8262R184	NH	SF	P	●	A	V	E	J	N	T	-	-	MS	MB	323593	323595
1/4	1/8	8262R262	8262R138	NH	SF	-	●	A	V	E	J	N	T	-	-	-	MB	323987	323989
1/4	5/32	8262R202	8262R220	NH	SF	P	●	A	V	E	J	N	T	-	-	MS	MB	323593	323595
1/4	5/32	8262R263	8262R142	NH	SF	-	●	A	V	E	J	N	T	-	-	-	MB	323987	323989
1/4	7/32	8262R208	8262R226	NH	SF	P	●	A	V	E	J	N	T	-	-	MS	MB	323593	323595
1/4	7/32	8262R264	8262R148	NH	SF	-	●	A	V	E	J	N	T	-	-	-	MB	323987	323989
1/4	9/32	8262R212	8262R230	NH	SF	P	●	A	V	E	J	N	T	-	VH	MS	MB	323593	323595
1/4	9/32	8262R265	8262R152	NH	SF	-	●	A	V	E	J	N	T	-	VH	-	MB	323987	323989
1/4	9/32	8262R078 ⑥	-	-	SF	-	-	●	-	-	-	-	-	-	-	-	MB	325039	-
1/4	5/16	8223P025 ④	-	-	-	-	●	A	-	-	-	-	-	-	-	-	-	322815	-
3/8	1/8	8263R115	8263R191	NH	SF	-	●	A	V	E	J	N	T	-	-	MS	MB	323593	323595
3/8	1/8	8263R070	8263R080	NH	SF	-	●	A	V	E	J	N	T	-	-	-	MB	323987	323989
3/8	5/32	8263R200	8263R193	NH	SF	-	●	A	V	E	J	N	T	-	-	MS	MB	323593	323595
3/8	5/32	8263R071	8263R081	NH	SF	-	●	A	V	E	J	N	T	-	-	-	MB	323987	323989
3/8	7/32	8263R124	8263R332	NH	SF	-	●	A	V	E	J	N	T	-	-	MS	MB	323593	323595
3/8	7/32	8263R072	8263R082	NH	SF	-	●	A	V	E	J	N	T	-	-	-	MB	323987	323989
3/8	9/32	8263R210	8263R333	NH	SF	-	●	A	V	E	J	N	T	-	-	MS	MB	323593	323595
3/8	9/32	8263R073	8263R083	NH	SF	-	●	A	V	E	J	N	T	-	-	-	MB	323987	323989
3/8	5/16	8223P027 ④	-	-	-	-	●	-	-	-	-	-	-	-	-	-	-	322815	-
3/8	5/8	8210P093	-	-	-	-	●	-	V	E	J	N	-	-	VH	MO	MB	322670	-
3/8	5/8	8210P033	-	-	-	-	●	-	V	E	J	N	-	-	VH	-	MB	322770	-
3/8	5/8	8210P006	-	-	-	-	●	-	V	E	J	N	-	-	-	MO	MB	322654	-
1/2	3/8	8223P003 ④	8223P010 ①	-	-	-	●	-	-	-	-	-	-	-	-	-	-	322816	322817
1/2	5/8	8210P094	-	-	-	-	●	-	V	E	J	N	-	-	VH	MO	MB	322670	-
1/2	5/8	8210P034	-	-	-	-	●	-	V	E	J	N	-	-	VH	-	MB	322770	-
1/2	5/8	-	8210P087	-	-	-	●	-	V	E	J	N	-	-	-	MO	MB	-	322676
1/2	5/8	8210P007	-	-	-	-	●	-	V	E	J	N	-	-	-	MO ③	MB	322654	-
3/4	5/8	-	8210P088	-	-	-	●	-	V	E	J	N	-	-	-	MO	MB	-	322676
3/4	3/4	8210P095	-	-	-	-	●	-	V	E	J	N	-	-	VH	MO	MB	322673	-
3/4	3/4	8030P003	-	-	-	-	●	-	V	E	J	N	-	-	-	MO	MB	322758	-
3/4	3/4	8210P035	-	-	-	-	●	-	V	E	J	N	-	-	VH	-	MB	322771	-
3/4	3/4	8030P083	-	-	-	-	●	-	V	E	J	N	-	-	-	-	MB	322763	-
3/4	3/4	8223P005 ④	-	-	-	-	●	-	-	-	-	-	-	-	-	-	-	322818	-
1	1	8210P004	-	-	-	-	●	-	V	E	J	N	-	-	-	MO	-	322677	-
1 1/4	1 1/8	8210P008	-	-	-	-	●	-	V	E	J	N	-	-	-	MO	-	322680	-
1 1/2	1 1/4	8210P022	-	-	-	-	●	-	V	E	J	N	-	-	-	MO	-	322680	-
2	1 3/4	8210P100	-	-	-	-	●	-	V	E	J	N	-	-	-	MO	-	322682	-

● = Standard. Other options may be available. All option combinations may not be available. Please consult your local ASCO contact.
① Valve contains PTFE main disc; ② Pressure rating reduced by 25%; ③ Pressure rating limited to 250 psi; ④ Valve contains Nylon 11 piston.
⑤ Cast UR disc supplied as standard, limits min. ambient temp. to 32˚F (0˚C). ⑥ Fuel gas service only; Ambient Temp. -40˚F to 140˚F, Fluid Temp. -40˚F to 167˚F; Gas capacity for 8262R077 is 18,700 Btu/hr, for 8262R078 53,500 Btu/hr based on 1" W.C. Drop @ 2" W.C. Inlet Pressure, 1000 Btu/cu.ft. or more, 0.64 Specific Gravity Gas.
⑦ NH suffix only available for Stainless Steel constructions. ⑧ 12-24V DC. ⑨ 24-120V AC/DC, 100-240V AC/DC.

Dimensions: inches (mm)

Const. Ref.		B	C	D	E	F	G	H	I
1	in	3.98	3.04	2.00	0.69	1.00	1.19	1.87	1.24
	mm	101	77	51	18	25	30	48	32
2	in	3.98	3.04	2.00	0.78	1.11	1.56	1.87	1.29
	mm	101	77	51	20	29	40	48	33
3	in	3.98	3.04	2.00	0.77	1.20	1.88	1.87	1.25
	mm	101	77	51	20	30	48	48	32
4	in	3.98	3.04	2.00	1.28	1.84	2.75	1.87	2.28
	mm	101	77	51	33	47	70	48	58
5	in	3.98	3.04	2.00	1.05	2.31	-	1.87	3.03
	mm	101	77	51	27	59	-	48	77
6	in	3.98	3.04	2.00	1.13	2.31	-	1.87	3.13
	mm	101	77	51	29	59	-	48	80
7	in	3.98	3.04	2.00	1.46	2.19	2.81	1.87	2.28
	mm	101	77	51	37	56	71	48	58
8	in	3.98	3.04	2.00	1.44	2.13	2.81	1.87	2.28
	mm	101	77	51	37	54	71	48	58
9	in	3.98	3.04	2.00	1.61	3.03	-	1.87	3.6
	mm	101	77	51	41	77	-	48	91
10	in	3.98	3.04	2.00	2.21	3.67	3.75	1.87	-
	mm	101	77	51	56	93	95	48	-
11	in	3.98	3.04	2.00	2.36	4.14	4.38	1.87	3.92
	mm	101	77	51	60	105	111	48	100
12	in	3.98	3.04	2.00	2.75	5.52	5.06	1.87	4.72
	mm	101	77	51	70	140	129	48	120
15	in	3.98	3.04	2.00	1.72	2.18	2.75	1.87	2.28
	mm	101	77	51	44	55	70	48	58
16	in	3.98	3.04	2.00	1.88	2.57	2.81	1.87	2.28
	mm	101	77	51	48	65	71	48	58
17	in	3.98	3.04	2.00	0.85	1.81	2.81	1.87	2.28
	mm	101	77	51	22	46	71	48	58
18	in	3.98	3.04	2.00	0.77	1.20	1.88	1.87	1.25
	mm	101	77	51	20	30	48	48	32

Const. Ref. 1

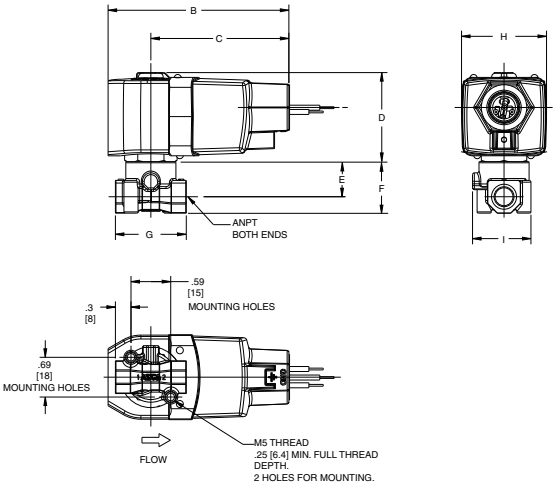

Const. Ref. 2

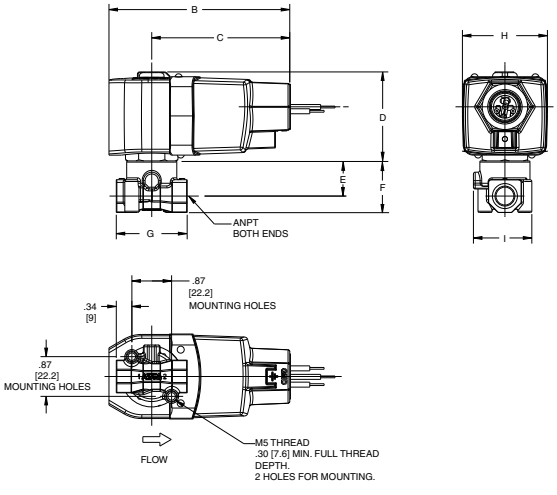

Const. Ref. 3

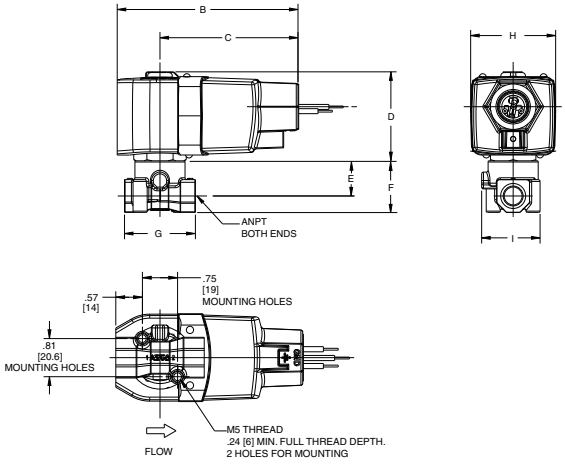

Const. Ref. 4, 7, 15, 16, 17

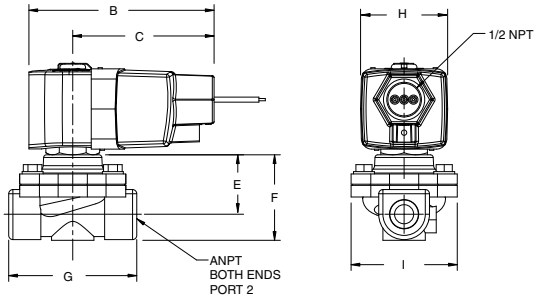

ELECTRONICALLY ENHANCED

ASCO®

Dimensions: inches (mm)

Const. Ref. 5, 6, 9

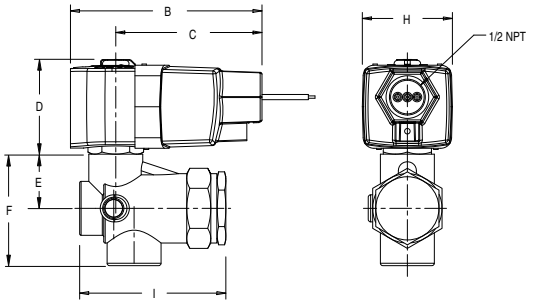

Const. Ref. 8

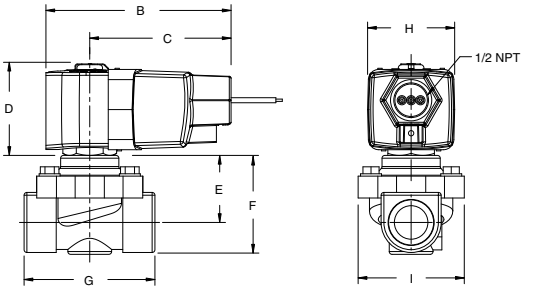

Const. Ref. 10

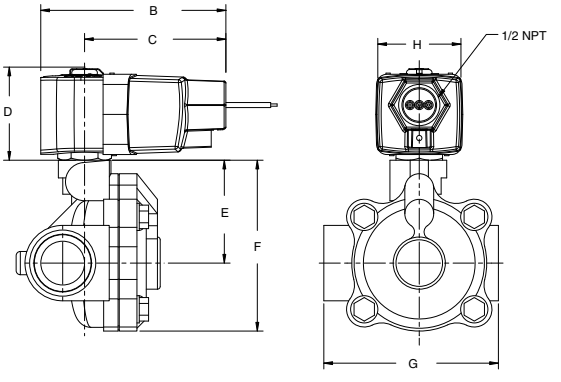

Const. Ref. 11, 12

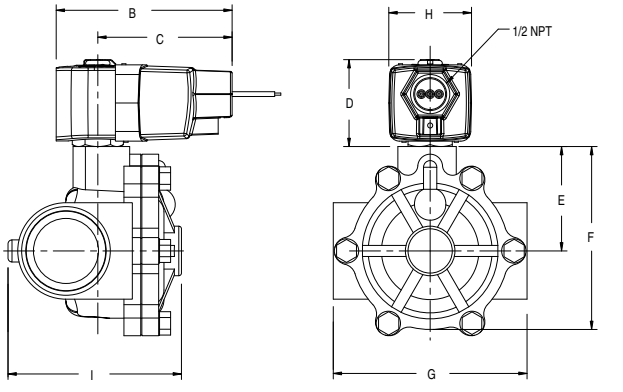

Const. Ref. 18

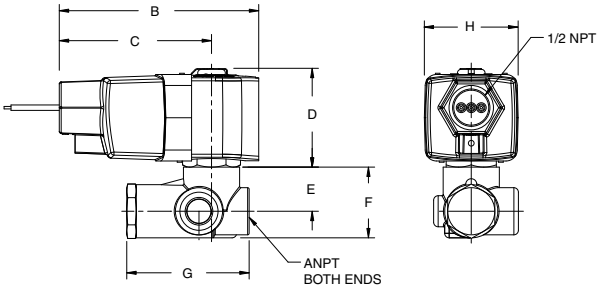

3-Way Features

- Three-way (3/2) Next Generation solenoid valves have three ports and two orifices. When one orifice is open, the other is closed
- Control of air, water, light oil, and other non-corrosive media
- Normally closed (pressure to cylinder port when energized) operation
- Normally open (cylinder port exhausts when energized) operation
- Universal operation (can function as normally open, normally closed, diverter of fluid flow, or selector of 2 fluid sources configurable by piping)
- Pipe sizes – 1/4 to 3/4 inch

3-Way Specifications (English units)

Pipe Size (in)	Orifice Dia. (in)	Cv Flow	Operating Pressure Differential (psi) Min.	Max. Air-Inert Gas	Max. Water	Max. Light Oil @ 300 SSU	Max. Fluid Temp. °F	Brass	Const. Ref.	Agency UL	Stainless Steel	Const. Ref.	Agency UL	Wattage DC	Wattage AC/DC	Approx. Shipping Weight (lbs.)
General Service - Normally Closed																
1/8	3/64	0.05 ③	0	300	300	300 ⑦	200 ⑥	8314R031	1	●	8314R037	1	●			1.7
1/8	3/32	0.15 ④	0	205	205	190 ⑦	200 ⑥	8314R032	1	●	8314R038	1	●			1.7
1/8	1/8	0.25 ④	0	145	145	100 ⑦	200 ⑥	8314R033	1	●	8314R039	1	●			1.7
1/4	3/64	0.05 ③	0	300	300	300 ⑦	200 ⑥	8314R034	2	●	8314R068	2	●			1.8
1/4	3/32	0.15 ④	0	205	205	190 ⑦	200 ⑥	8314R035	2	●	8314R121	2	●			1.8
1/4	1/8	0.25 ④	0	145	145	100 ⑦	200 ⑥	8314R036	2	●	8314R126	2	●			1.8
1/4	5/32	0.50 ④	0	75	75	75 ⑦	200 ⑥	8314R130	2	●	8314R230	2	●			1.8
1/4	7/32	0.70 ④	0	40	40	40 ⑦	200 ⑥	8314R131	2	●	8314R231	2	●			1.8
1/4	9/32	0.85 ④	0	25	25	25 ⑦	200 ⑥	8314R132	2	●	8314R232	2	●			1.8
1/4	1/32	0.05	0	750	750	750	194	8320R180	3	●	-	-	-	1.2 ⑧	1.5 ⑨	2.5
1/4	1/16	0.09	0	255	255	255	194	8320R182	3	●	-	-	-			2.5
1/4	7/64	0.23	0	190	190	190	194	8320R184	3	●	-	-	-			2.5
1/4	1/8	0.25	0	90	90	90	194	8320R186	3	●	-	-	-			2.5
1/4	11/64	0.35	0	55	55	55	194	8320R188	3	●	-	-	-			2.5
1/4	3/32 ①	0.2 ①	5 ⑤	150	150	100	180	8317P035	4	●	-	-	-			2.7
1/4	9/32 ②	0.8 ②	10	200	200	200	180	8321P001	5	●	-	-	-			3.8
3/8	9/32 ②	0.8 ②	10	200	200	200	180	8321P002	5	●	-	-	-			3.8
3/8	5/8	2.5	10	250	250	-	180	8316P054	6	●	-	-	-			4.9
1/2	5/8	3.2	10	250	250	-	180	8316P064	6	●	-	-	-			4.9
3/4	11/16	4.8	10	250	250	-	180	8316P074	7	●	-	-	-			5.1
NAMUR Mount - 3/2 Normally Closed																
1/4	3/32	0.12	-	150	-	-	194	8320R704	9	●	8320R714	9	●	1.2 ⑧	1.5 ⑨	3.2
General Service - Normally Open																
1/8	3/64	0.05 ③	0	300	300	300 ⑦	200 ⑥	8314R049	1	●	8314R055	1	●			1.7
1/8	3/32	0.15 ④	0	175	175	175 ⑦	200 ⑥	8314R050	1	●	8314R056	1	●			1.7
1/8	1/8	0.25 ④	0	160	160	160 ⑦	200 ⑥	8314R051	1	●	8314R057	1	●			1.7
1/4	3/64	0.05 ③	0	300	300	300 ⑦	200 ⑥	8314R052	2	●	8314R069	2	●			1.8
1/4	3/32	0.15 ④	0	175	175	175 ⑦	200 ⑥	8314R053	2	●	8314R122	2	●			1.8
1/4	1/8	0.25 ④	0	160	160	160 ⑦	200 ⑥	8314R054	2	●	8314R070	2	●			1.8
1/4	5/32	0.50 ④	0	150	150	150 ⑦	200 ⑥	8314R133	2	●	8314R233	2	●			1.8
1/4	7/32	0.70 ④	0	100	100	100 ⑦	200 ⑥	8314R134	2	●	8314R234	2	●	1.2 ⑧	1.5 ⑨	1.8
1/4	9/32	0.85 ④	0	65	65	65 ⑦	200 ⑥	8314R135	2	●	8314R235	2	●			1.8
1/8	3/64	0.06	0	350	350	350	194	8320R136	8	●	8320R146	8	●			2.5
1/4	1/32	0.05	0	790	825	825	194	8320R190	3	●	-	-	-			2.5
1/4	1/16	0.09	0	255	255	255	194	8320R192	3	●	-	-	-			2.5
1/4	3/32	0.12	0	200	200	200	194	8320R194	3	●	-	-	-			2.5
1/4	1/8	0.25	0	95	95	95	194	8320R196	3	●	-	-	-			2.5
1/4	11/64	0.35	0	60	60	60	194	8320R198	3	●	-	-	-			2.5
General Service - Universal Operation																
1/8	3/64	0.05 ③	0	200	200	200 ⑦	200 ⑥	8314R041	1	●	8314R042	1	●			1.7
1/8	3/32	0.15 ④	0	105	85	60 ⑦	200 ⑥	8314R043	1	●	8314R044	1	●			1.7
1/8	1/8	0.25 ④	0	70	70	40 ⑦	200 ⑥	8314R045	1	●	8314R040	1	●			1.7
1/4	3/64	0.05 ③	0	200	200	200 ⑦	200 ⑥	8314R006	2	●	8314R123	2	●			1.8
1/4	3/32	0.15 ④	0	105	85	60 ⑦	200 ⑥	8314R007	2	●	8314R120	2	●			1.8
1/4	1/8	0.25 ④	0	70	70	40 ⑦	200 ⑥	8314R008	2	●	8314R124	2	●			1.8
1/4	5/32	0.50 ④	0	35	35	35 ⑦	200 ⑥	8314R127	2	●	8314R227	2	●	1.2 ⑧	1.5 ⑨	1.8
1/4	7/32	0.70 ④	0	18	18	18 ⑦	200 ⑥	8314R128	2	●	8314R228	2	●			1.8
1/4	9/32	0.85 ④	0	10	10	10 ⑦	200 ⑥	8314R129	2	●	8314R229	2	●			1.8
1/4	1/32	0.05	0	395	395	395	194	8320R170	3	●	-	-	-			2.5
1/4	1/16	0.09	0	160	160	160	194	8320R172	3	●	-	-	-			2.5
1/4	3/32	0.12	0	100	100	100	194	8320R174	3	●	-	-	-			2.5
1/4	1/8	0.25	0	50	50	50	194	8320R176	3	●	-	-	-			2.5
1/4	11/64	0.35	0	30	30	30	194	8320R178	3	●	-	-	-			2.5

● = General Purpose Valve. ① 1/4" exhaust orifice with 0.73 Cv flow; ② 11/32" exhaust orifice with 1.20 Cv flow; ③ 3/64" exhaust orifice with 0.06 Cv flow. ④ 3/32" exhaust orifice with 0.20 Cv flow.
⑤ 10 psi minimum for light oils. ⑥ Max. fluid temp. 180°F for light oil @ 45 SSU. ⑦ Pressure rating for light oil @ 45 SSU. ⑧ 12-24V DC. ⑨ 24-120V AC/DC, 100-240V AC/DC.

ASCO®

3-Way Specifications (Metric units)

Pipe Size (in)	Orifice Dia. (mm)	Kv Flow Factor (m^3/h)	Operating Pressure Differential (bar) Min.	Max. Air-Inert Gas	Max. Water	Max. Light Oil @ 300 SSU	Max. Fluid Temp.˚C	Brass	Const. Ref.	Agency UL	Stainless Steel	Const. Ref.	Agency UL	Wattage DC	Wattage AC/DC	Approx. Shipping Weight (kgs.)
General Service - Normally Closed																
1/8	1.2	0.04 ③	0	21	21	21 ⑦	93 ⑥	8314R031	1	●	8314R037	1	●			0.77
1/8	2.4	0.13 ④	0	14	14	13 ⑦	93 ⑥	8314R032	1	●	8314R038	1	●			0.77
1/8	3.2	0.22 ④	0	10	10	7 ⑦	93 ⑥	8314R033	1	●	8314R039	1	●			0.77
1/4	1.2	0.04 ③	0	21	21	21 ⑦	93 ⑥	8314R034	2	●	8314R068	2	●			0.81
1/4	2.4	0.13 ④	0	14	14	13 ⑦	93 ⑥	8314R035	2	●	8314R121	2	●			0.81
1/4	3.2	0.22 ④	0	10	10	7 ⑦	93 ⑥	8314R036	2	●	8314R126	2	●			0.81
1/4	4.0	0.43 ④	0	5.2	5.2	5.2 ⑦	93 ⑥	8314R130	2	●	8314R230	2	●			0.81
1/4	5.6	0.60 ④	0	3	3	3 ⑦	93 ⑥	8314R131	2	●	8314R231	2	●			0.81
1/4	7.1	0.73 ④	0	2	2	2 ⑦	93 ⑥	8314R132	2	●	8314R232	2	●			0.81
1/4	0.8	0.04	0	51	51	51	90	8320R180	3	●	-	-	-	1.2 ⑧	1.5 ⑨	
1/4	1.9	0.08	0	18	18	18	90	8320R182	3	●	-	-	-			1.1
1/4	2.7	0.10	0	13	13	13	90	8320R184	3	●	-	-	-			1.1
1/4	3.9	0.21	0	6	6	6	90	8320R186	3	●	-	-	-			1.1
1/4	4.4	0.30	0	4	4	4	90	8320R188	3	●	-	-	-			1.1
1/4	2.3 ①	0.17 ①	0.3 ④	10	10	7	82	8317P035	4	●	-	-	-			1.2
1/4	7.1 ②	0.7 ②	0.7	14	14	14	82	8321P001	5	●	-	-	-			1.7
3/8	7.1 ②	0.7 ②	0.7	14	14	14	82	8321P002	5	●	-	-	-			1.7
3/8	3.3	2.1	0.7	17	17	-	82	8316P054	6	●	-	-	-			2.2
1/2	3.3	2.7	0.7	17	17	-	82	8316P064	6	●	-	-	-			2.2
3/4	17	4.1	0.7	17	17	-	82	8316P074	7	●	-	-	-			2.3
NAMUR Mount - 3/2 Normally Closed																
1/4	2.4	0.1	-	10	-	-	90	8320R704	9	●	8320R714	9	●	1.2 ⑧	2	1.5
General Service - Normally Open																
1/8	1.2	0.04 ③	0	21	21	21 ⑦	93 ⑥	8314R049	1	●	8314R055	1	●			0.77
1/8	2.4	0.13 ④	0	12	12	12 ⑦	93 ⑥	8314R050	1	●	8314R056	1	●			0.77
1/8	3.2	0.22 ④	0	11	11	11 ⑦	93 ⑥	8314R051	1	●	8314R057	1	●			0.77
1/4	1.2	0.04 ③	0	21	21	21 ⑦	93 ⑥	8314R052	2	●	8314R069	2	●			0.81
1/4	2.4	0.13 ④	0	12	12	12 ⑦	93 ⑥	8314R053	2	●	8314R122	2	●			0.81
1/4	3.2	0.22 ④	0	11	11	11 ⑦	93 ⑥	8314R054	2	●	8314R070	2	●			0.81
1/4	4.0	0.43 ④	0	10	10	10 ⑦	93 ⑥	8314R133	2	●	8314R233	2	●			0.81
1/4	5.6	0.60 ④	0	6.8	6.8	6.8 ⑦	93 ⑥	8314R134	2	●	8314R234	2	●	1.2 ⑧	1.5 ⑨	0.81
1/4	7.1	0.73 ④	0	4.5	4.5	4.5 ⑦	93 ⑥	8314R135	2	●	8314R235	2	●			0.81
1/8	1.2	0.05	0	24	24	24	90	8320R136	8	●	8320R146	8	●			1.1
1/4	0.8	0.04	0	54	57	57	90	8320R190	3	●	-	-	-			1.1
1/4	1.6	0.08	0	18	18	18	90	8320R192	2	●	-	-	-			1.1
1/4	2.4	0.10	0	14	14	14	90	8320R194	2	●	-	-	-			1.1
1/4	3.2	0.21	0	6.5	6.5	6.5	90	8320R196	2	●	-	-	-			1.1
1/4	4.4	0.30	0	4	4	4	90	8320R198	2	●	-	-	-			1.1
General Service - Universal Operation																
1/8	1.2	0.04 ③	0	14	14	14 ⑦	93 ⑥	8314R041	1	●	8314R042	1	●			0.77
1/8	2.4	0.13 ④	0	7	6	4 ⑦	93 ⑥	8314R043	1	●	8314R044	1	●			0.77
1/8	3.2	0.22 ④	0	5	5	3 ⑦	93 ⑥	8314R045	1	●	8314R040	1	●			0.77
1/4	1.2	0.04 ③	0	14	14	14 ⑦	93 ⑥	8314R006	2	●	8314R123	2	●			0.81
1/4	2.4	0.13 ④	0	7	6	4 ⑦	93 ⑥	8314R007	2	●	8314R120	2	●			0.81
1/4	3.2	0.22 ④	0	5	5	3 ⑦	93 ⑥	8314R008	2	●	8314R124	2	●			0.81
1/4	4.0	0.43 ④	0	2.5	2.5	2.5 ⑦	93 ⑥	8314R127	2	●	8314R227	2	●	1.2 ⑧	1.5 ⑨	0.81
1/4	5.6	0.60 ④	0	1.5	1.5	1.5 ⑦	93 ⑥	8314R128	2	●	8314R228	2	●			0.81
1/4	7.1	0.73 ④	0	0.7	0.7	0.7 ⑦	93 ⑥	8314R129	2	●	8314R229	2	●			0.81
1/4	0.8	0.04	0	27	27	27	90	8320R170	3	●	-	-	-			1.1
1/4	1.6	0.08	0	11	11	11	90	8320R172	3	●	-	-	-			1.1
1/4	2.4	0.10	0	7	7	7	90	8320R174	3	●	-	-	-			1.1
1/4	3.2	0.21	0	3	3	3	90	8320R176	3	●	-	-	-			1.1
1/4	4.4	0.30	0	2	2	2	90	8320R178	3	●	-	-	-			1.1

● = General Purpose Valve. ① 6.3 mm exhaust orifice with 0.63 Kv flow; ② 8.7 mm exhaust orifice with 1.0 Kv flow; ③ 1.3 mm exhaust orifice with 0.05 Kv flow.
④ 2.5 mm exhaust orifice with 0.17 Kv flow. ⑤ 0.7 bar minimum for light oils. ⑥ Max. fluid temp. 82˚C for light oil @ 45 SSU. ⑦ Pressure rating for light oil @ 45 SSU.
⑧ 12-24V DC. ⑨ 24-120V AC/DC, 100-240V AC/DC.

ELECTRONICALLY ENHANCED

3-Way Optional Features Chart

Pipe Size (in)	Orifice Dia. (in)	Base Catalog Number		Resilient Materials and Suffix Options									Other		Standard Rebuild Kit	
		Brass	Stainless Steel	Silicone Free	NBR	FKM	EPDM	CR	Oxygen Service	PTFE ①	Urethane	Vacuum	Manual Operator ③	Mounting Bracket	Brass	Stainless Steel
1/8	3/64	8314R031	8314R037	SF	●	V ②	-	-	N	-	-	-	MS	MB	323957	323959
1/8	3/64	8314R041	8314R042	SF	●	V ②	-	-	N	-	-	-	MS	MB	323961	323963
1/8	3/64	8314R049	8314R055	SF	●	V ②	-	-	N	-	-	-	MS	MB	323969	323971
1/8	3/32	8314R032	8314R038	SF	●	V ②	-	-	N	-	-	-	MS	MB	323958	323960
1/8	3/32	8314R043	8314R044	SF	●	V ②	-	-	N	-	-	-	MS	MB	323966	323968
1/8	3/32	8314R050	8314R056	SF	●	V ②	-	-	N	-	-	-	MS	MB	323970	323972
1/8	1/8	8314R033	8314R039	SF	●	V ②	-	-	N	-	-	-	MS	MB	323958	323960
1/8	1/8	8314R045	8314R040	SF	●	V ②	-	-	N	-	-	-	MS	MB	323966	323968
1/8	1/8	8314R051	8314R057	SF	●	V ②	-	-	N	-	-	-	MS	MB	323970	323972
1/8	3/64	8320R136	8320R146	SF	●	V	E	J	N	-	-	-	MO/MS	MB	326062	326062
1/4	1/32	8320R190	-	SF	●	V	E	J	N	-	-	-	MO/MS	MB	326060	-
1/4	3/64	8314R006	8314R123	SF	●	V ②	-	-	N	-	-	-	MS	MB	323961	323963
1/4	3/64	8314R034	8314R068	SF	●	V ②	-	-	N	-	-	-	MS	MB	323957	323959
1/4	3/64	8314R052	8314R069	SF	●	V ②	-	-	N	-	-	-	MS	MB	323969	323971
1/4	1/32	8320R170	-	SF	●	V	E	J	N	-	-	-	MO/MS ④	MB	326061	-
1/4	1/16	8320R172	-	SF	●	V	E	J	N	-	-	-	MO/MS ④	MB	326061	-
1/4	1/8	8320R176	-	SF	●	V	E	J	N	-	-	-	MO/MS ④	MB	326061	-
1/4	11/64	8320R178	-	SF	●	V	E	J	N	-	-	-	MO/MS ④	MB	326061	-
1/4	1/32	8320R180	-	SF	●	V	E	J	N	-	-	-	MO/MS	MB	326059	-
1/4	1/16	8320R182	-	SF	●	V	E	J	N	-	-	-	MO/MS	MB	326059	-
1/4	11/64	8320R188	-	SF	●	V	E	J	N	-	-	-	MO/MS	MB	326059	-
1/4	1/16	8320R192	-	SF	●	V	E	J	N	-	-	-	MO/MS ④	MB	326060	-
1/4	3/32	8314R007	8314R120	SF	●	V ②	-	-	N	-	-	-	MS	MB	323966	323968
1/4	3/32	8314R035	8314R121	SF	●	V ②	-	-	N	-	-	-	MS	MB	323958	323960
1/4	3/32	8314R053	8314R122	SF	●	V ②	-	-	N	-	-	-	MS	MB	323970	323972
1/4	3/32	8317P035	-	SF	●	V	-	-	N	-	-	-	-	-	322919	-
1/4	3/32	8320R704	8320R714	SF	●	V	E	J	N	-	-	-	MO/MS	-	326059	326059
1/4	3/32	8320R174	-	SF	●	V	E	J	N	-	-	-	MO/MS ④	MB	326061	-
1/4	7/64	8320R184	-	SF	●	V	E	J	N	-	-	-	MO/MS ④	MB	326059	-
1/4	3/32	8320R194	-	SF	●	V	E	J	N	-	-	-	MO/MS ④	MB	326060	-
1/4	1/8	8320R196	-	SF	●	V	E	J	N	-	-	-	MO/MS ④	MB	326060	-
1/4	1/8	8320R186	-	SF	●	V	E	J	N	-	-	-	MO/MS ④	MB	326059	-
1/4	11/64	8320R198	-	SF	●	V	E	J	N	-	-	-	MO/MS ④	MB	326060	-
1/4	1/8	8314R008	8314R124	SF	●	V ②	-	-	N	-	-	-	MS	MB	323966	323968
1/4	1/8	8314R036	8314R126	SF	●	V ②	-	-	N	-	-	-	MS	MB	323958	323960
1/4	1/8	8314R054	8314R070	SF	●	V ②	-	-	N	-	-	-	MS	MB	323970	323972
1/4	5/32	8314R127	8314R227	SF	●	V ②	-	-	N	-	-	-	MS	MB	323966	323968
1/4	5/32	8314R130	8314R230	SF	●	V ②	-	-	N	-	-	-	MS	MB	323958	323960
1/4	5/32	8314R133	8314R233	SF	●	V ②	-	-	N	-	-	-	MS	MB	323970	323972
1/4	7/32	8314R128	8314R228	SF	●	V ②	-	-	N	-	-	-	MS	MB	323966	323968
1/4	7/32	8314R131	8314R231	SF	●	V ②	-	-	N	-	-	-	MS	MB	323958	323960
1/4	7/32	8314R134	8314R234	SF	●	V ②	-	-	N	-	-	-	MS	MB	323970	323972
1/4	9/32	8314R129	8314R229	SF	●	V ②	-	-	N	-	-	-	MS	MB	323966	323968
1/4	9/32	8314R132	8314R232	SF	●	V ②	-	-	N	-	-	-	MS	MB	323958	323960
1/4	9/32	8314R135	8314R235	SF	●	V ②	-	-	N	-	-	-	MS	MB	323970	323972
1/4	9/32	8321P001	-	⑤	●	V	E	-	-	-	-	-	MO/MS	-	322688	-
3/8	9/32	8321P002	-	⑤	●	V	E	-	-	-	-	-	MO/MS	-	322688	-
3/8	5/8	8316P054	-	⑤	●	V	E	J	N	-	-	-	MO	MB	322690	-
1/2	5/8	8316P064	-	⑤	●	V	E	J	N	-	-	-	MO	MB	322690	-
3/4	11/16	8316P074	-	⑤	●	V	E	J	N	-	-	-	MO	MB	322692	-

● = Standard. Other options may be available. All option combinations may not be available. Please consult your local ASCO contact. ① Pressure rating reduced by 25%.
② Upper disc is FKM. ③ Not available with PTFE resilient materials. ④ Pressure rating limited to 100 psi (6.9 bar) for MO constructions. ⑤ Consult factory.

ASCO®

Dimensions: inches (mm)

Const. Ref.		B	C	D	E	F	G	H	I	J
1	in	3.98	3.04	2.09	0.69	1.00	1.19	1.87	1.24	-
	mm	101	77	53	18	25	30	48	32	-
2	in	3.98	3.04	2.09	0.79	1.19	1.56	1.87	1.29	-
	mm	101	77	53	20	30	40	48	33	-
3	in	3.98	3.04	2.00	1.02	2.02	1.69	1.87	1.45	0.44
	mm	101	77	51	26	51	43	48	37	11
4	in	3.98	3.04	2.00	0.57	1.07	2.00	1.87	2.05	-
	mm	101	77	51	14	27	50	48	52	-
5	in	3.98	3.04	2.00	1.00	2.03	1.31	1.87	3.12	1.00
	mm	101	77	51	25	52	33	48	79	25
6	in	3.98	3.04	2.00	2.12	3.77	2.76	1.87	4.29	-
	mm	101	77	51	54	96	70	48	109	-
7	in	3.98	3.04	2.00	2.5	4.19	-	1.87	3.38	-
	mm	101	77	51	64	106	-	48	86	-
8	in	3.98	3.04	2.00	0.67	1.64	1.19	1.87	-	1.81
	mm	101	77	51	17	42	30	48	-	46

Const. Ref.1, 2

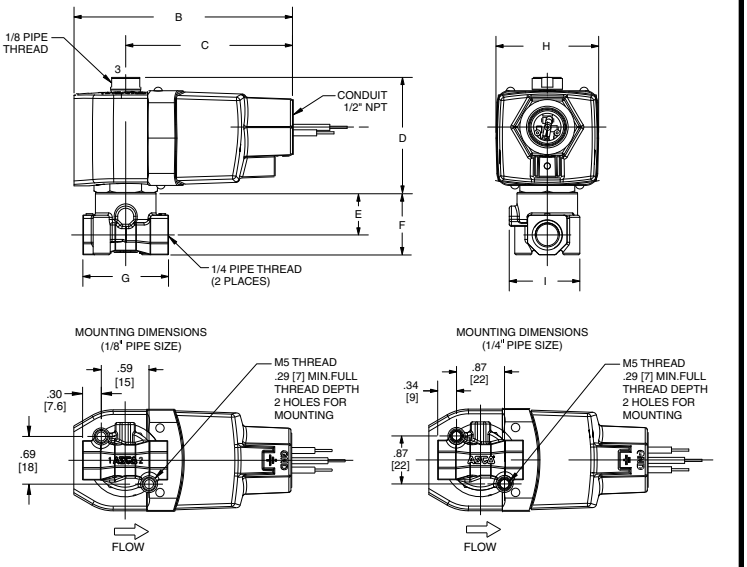

Const. Ref. 3

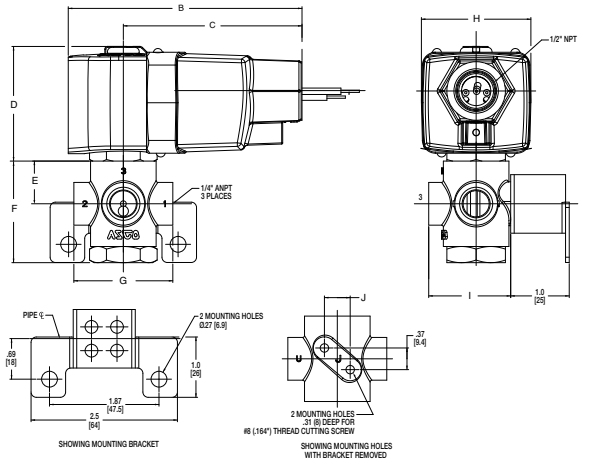

Const. Ref. 4

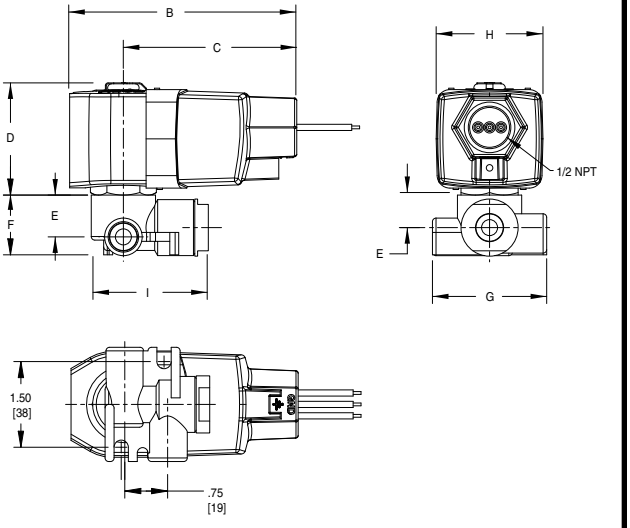

Const. Ref. 5

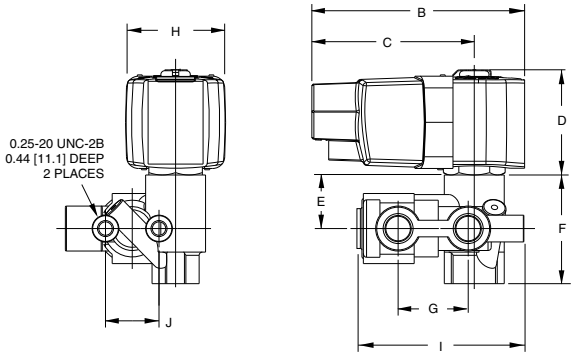

Dimensions: inches (mm)

Const. Ref. 6

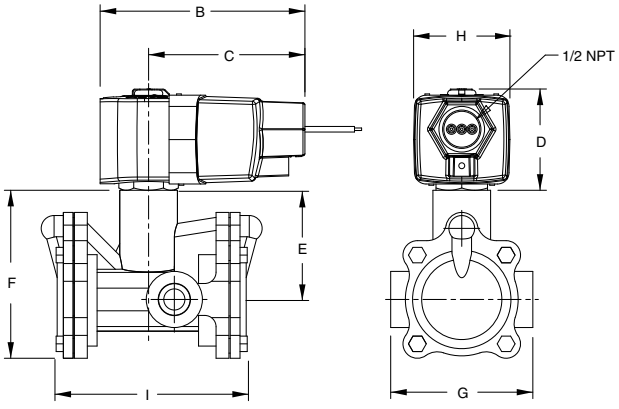

Const. Ref. 7

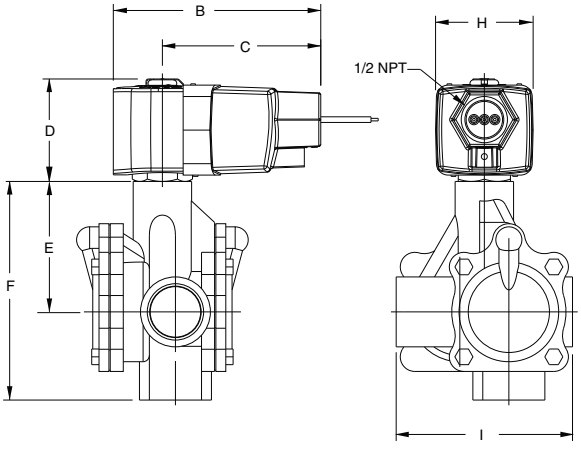

Const. Ref. 8

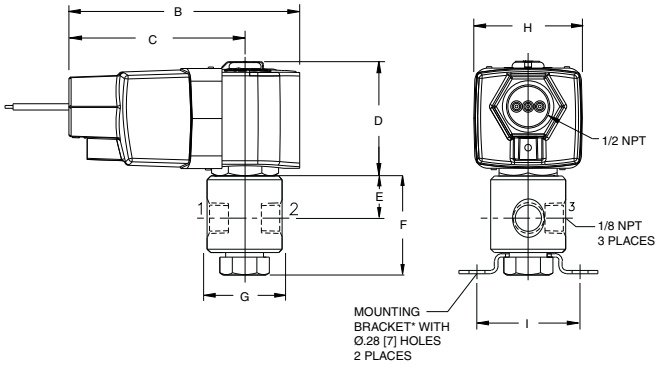

Const. Ref. 9

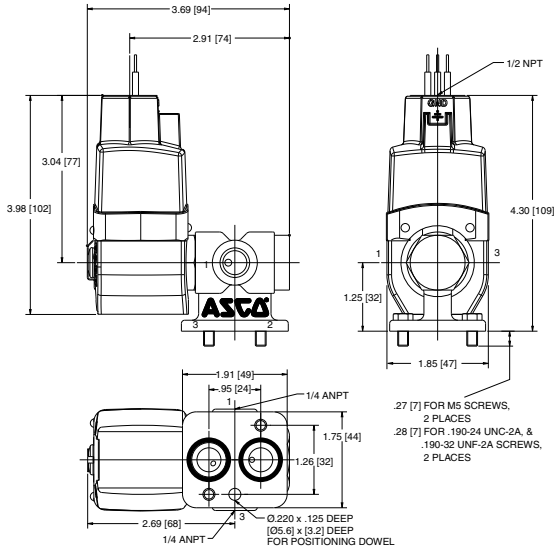

ASCO®

4-Way Features

- Four-way, four port (4/2) and five port (5/2) Next Generation solenoid valves have one pressure port, 2 cylinder ports, and either 1 or 2 exhaust ports
- Control of air, water, light oil, and non-corrosive media
- Single solenoid operation (pressure and exhaust ports and cylinder ports alternate connection based on solenoid operation)
- Pipe sizes – 1/4 to 1 inch

4-Way Specifications (English units)

Pipe Size (in)	Orifice Dia. (in)	Cv Flow		Operating Pressure Differential (psi)				Max. Fluid Temp. ˚F	Brass	Const. Ref.	Agency	316L Stainless Steel	Const. Ref.	Agency	Wattage	
					Max.											
		Pressure	Exhaust	Min.	Air-Inert Gas	Water	Light Oil @ 300 SSU				UL			UL	DC	AC/DC
General Service - Single Solenoid																
1/4	1/16 ②	0.09	0.09	10	150	150	150 ③	180	8345P001	1	●	-	-	-		
1/4	1/4	0.8	1.0	10 ①	250	250	250	180	8344P070	2	●	-	-	-		
3/8	3/8	1.4	2.2	10 ①	250	250	250	180	8344P072	3	●	-	-	-	1.2 ⑤	1.5 ⑥
1/2	3/8	1.4	2.2	10 ①	250	250	250	180	8344P074	3	●	-	-	-		
3/4	3/4	5.2	5.6	10 ①	250	250	250	180	8344P076	4	●	-	-	-		
1	3/4	5.2	5.6	10 ①	250	250	250	180	8344P078	4	●	-	-	-		
General Service - 4/2 Dual Solenoid																
3/8	3/8	1.4	2.2	10 ①	300	300	200	180	8344P080	5	●	-	-	-	1.2 ⑤	1.5 ⑥
NAMUR Mount - 3/2, 5/2 Single Solenoid																
1/4	1/4	0.86	0.86	30	150	-	-	180	EE8551P401 ④	6	●	EE8551P409	6	●	1.2 ⑤	1.5 ⑥

● = General Purpose Valve. ① 25 psi minimum for light oils. ② 3/32" exhaust orifice. ③ Viscosity 50 SSU max. ④ Aluminum body. ⑤ 12-24V DC. ⑥ 24-120V AC/DC, 100-240V AC/DC.

4-Way Specifications (Metric units)

Pipe Size (in)	Orifice Dia. (mm)	Kv Flow Factor (m^3/h)		Operating Pressure Differential (bar)				Max. Fluid Temp. ˚C	Brass	Const. Ref.	Agency	316L Stainless Steel	Const. Ref.	Agency	Wattage	
					Max.											
		Pressure	Exhaust	Min.	Air-Inert Gas	Water	Light Oil @ 300 SSU				UL			UL	DC	AC/DC
General Service - Single Solenoid																
1/4	1.5 ②	0.07	0.07	0.7	10	10	10 ③	82	8345P001	1	●	-	-	-		
1/4	6.3	0.7	0.86	0.7 ①	17	17	17	82	8344P070	2	●	-	-	-		
3/8	9.5	1.2	2	0.7 ①	17	17	17	82	8344P072	3	●	-	-	-	1.2 ⑤	1.5 ⑥
1/2	9.5	1.2	2	0.7 ①	17	17	17	82	8344P074	3	●	-	-	-		
3/4	19	4.5	4.8	0.7 ①	17	17	17	82	8344P076	4	●	-	-	-		
1	19	4.5	4.8	0.7 ①	17	17	17	82	8344P078	4	●	-	-	-		
General Service - 4/2 Dual Solenoid																
3/8	9.5	1.2	1.9	①	21	21	14	82	8344P080	5	●	-	-	-	1.2 ⑤	1.5 ⑥
NAMUR Mount - 3/2, 5/2 Single Solenoid																
1/4	6.3	0.74	0.74	2.1	10.3	-	-	82	EE8551P401④	6	●	EE8551P409	6	●	1.2 ⑤	1.5 ⑥

● = General Purpose Valve. ① 25 psi minimum for light oils. ② 3/32" exhaust orifice. ③ Viscosity 50 SSU max. ④ Aluminum body. ⑤ 12-24V DC. ⑥ 24-120V AC/DC, 100-240V AC/DC.

Important

A Minimum Operating Pressure Differential must be maintained between the pressure and exhaust ports. Supply and exhaust piping must be full area, unrestricted. ASCO flow controls and other similar components must be installed in the cylinder lines only.

Refer to Engineering Section for details.

4-Way Optional Features Chart

Pipe Size (in)	Orifice Dia. (in)	Base Catalog Number		Resilient Materials and Suffix Options								Other		Standard Rebuild Kit
		Brass	Stainless Steel	NBR	FKM	EPDM	CR	Oxygen Service	PTFE	Urethane	Vacuum	Manual Operator	Mounting Bracket	Brass
1/4	1/16	8345P001	-	●	V	-	-	-	-	-	-	MO	-	322925
1/4	1/4	EE8551P401*	EE8551P409	●	-	-	-	-	-	-	-	MH/MS	-	-
1/4	1/4	8344P070	-	●	V	-	-	-	-	-	-	MO	-	322696
3/4	3/4	8344P080	-	●	V	-	-	-	-	-	-	MO		322700
3/8	3/8	8344P072	-	●	V	-	-	-	-	-	-	MO	-	322697
1/2	3/8	8344P074	-	●	V	-	-	-	-	-	-	MO	-	322697
3/4	3/4	8344P076	-	●	V	-	-	-	-	-	-	MO	-	322698
1	3/4	8344P078	-	●	V	-	-	-	-	-	-	MO	-	322698

● = Standard. * Aluminum body.

Dimensions: inches (mm)

Const. Ref.		B	C	D	E	F	G	H	I	J	K	Exhaust Pipe Size
1	in	3.98	3.04	2.0	1.12	2.08	2.94	1.87	4.82	1.03	1.41	3/8
	mm	101	77	51	28	53	75	48	122	26	112	
2	in	3.98	3.04	2.09	1.00	1.75	2.06	1.87	3.00	1.09	-	1/4
	mm	101	77	53	25	44	52	35	76	28	-	
3	in	3.98	3.04	2.0	0.94	2.06	3.18	1.87	6.05	1.50	1.86	1/2
	mm	101	77	51	24	52	81	48	154	38	47	
4	in	3.98	3.04	2.0	1.31	2.86	4.12	1.87	8.25	2.10	2.12	1
	mm	101	77	51	33	73	105	48	210	53	54	

Const. Ref. 1

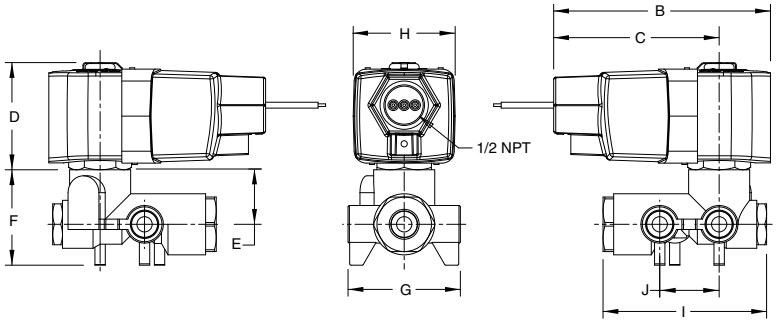

Const. Ref. 2

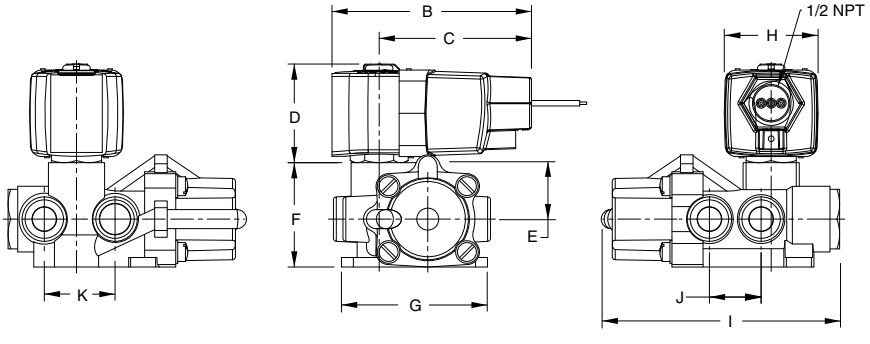

Dimensions: inches (mm)

Const. Ref. 3, 4

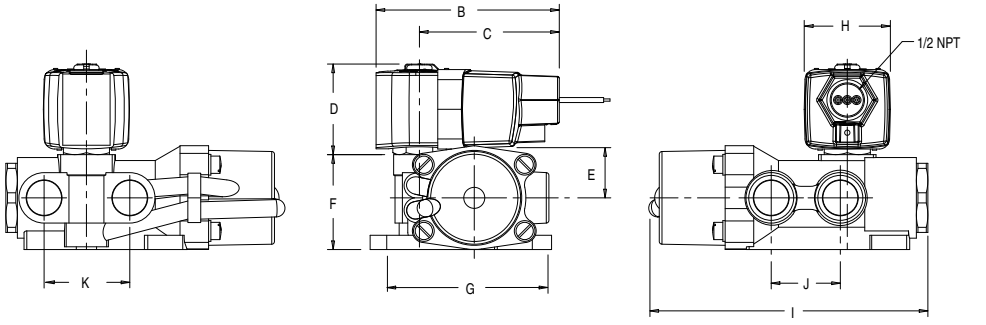

Const. Ref. 5

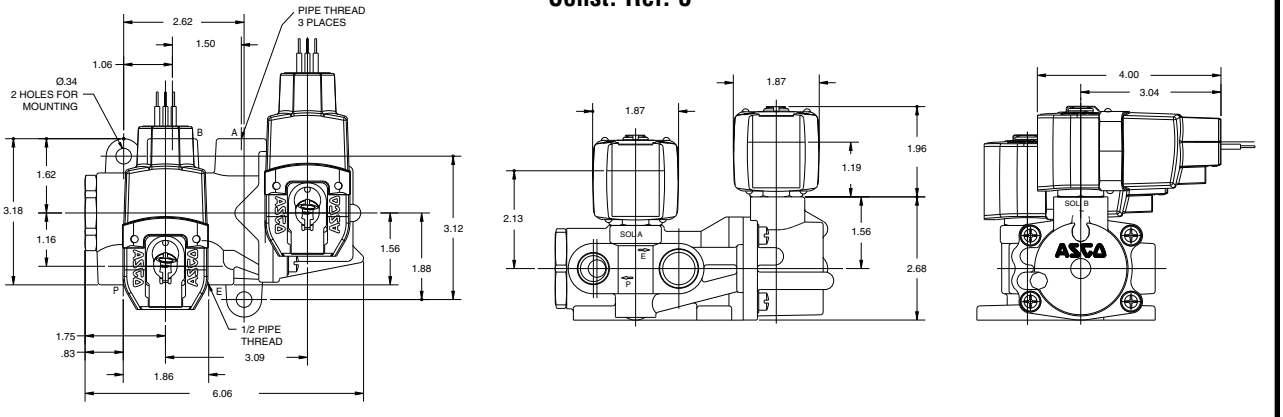

Series	8551
NPT	1/4
L1	4.96 (126)
L2	6.50 (165)
H2	3.97 (101)
H1	1.57 (40)
W	1.77 (45)

Optional Manual Operators		
Add Suffix		Description
MO		Push and turn to lock with flat head screwdriver slot
MI		Momentary push in with flat head screwdriver slot
MH		Momentary push in by hand
MS		Push and turn to lock by hand

Const. Ref. 6

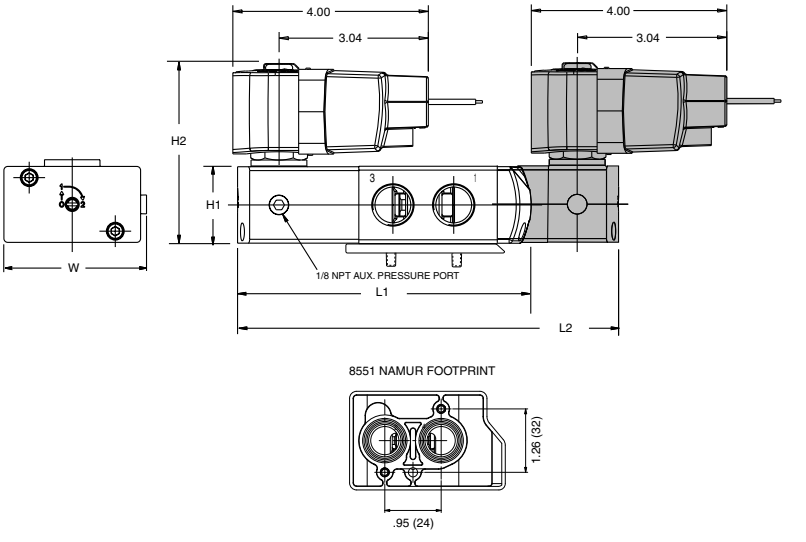

Electronically Enhanced Solenoids
(Next Generation)

All RedHat Next Generation solenoid valves are rated for continuous duty under the operating conditions outlined within this section.

Coil Operating Voltage Ranges

All coils are designed for industrial operating voltages and can be used on the following voltage ranges:

Voltage Range	Minimum Voltage	Maximum Voltage
100-240V/50 or 60Hz/DC	85	264
24-120V/50 or 60Hz/DC	20.4	132
12-24/DC only	10.4	26.4

The coils with voltage ranges of 100-240 and 24-120 have three lead wires, 24 inches long (2 red for power input, and one green lead for grounding where necessary). These two versions are not polarity sensitive.

The coil with a voltage range of 12-24/DC has 3 lead wires, one red, one black, and one green. This coil is polarity sensitive. The red lead is the positive, black is the negative, and green is the ground wire. This solenoid is also polarity protected. Reversing the polarity will not damage the coil, but the coil will not function until the correct polarity is applied.

Note: The 100-240 voltage range is also suitable for battery charging circuits designed around a 125/DC nominal voltage range.

Electrical Specifications

2 Watt Electronic Coils	Type
Maximum Ambient Temperature	140˚F
Maximum Cycle Rate	1 Operation/ Second
Standard Coil Class of Insulation	H

Power Consumption

The Next Generation solenoid power rating is 1.2 watt of power for 12-24V DC and 1.5 watts for 24-120V AC/DC, and 100-240V AC/DC.

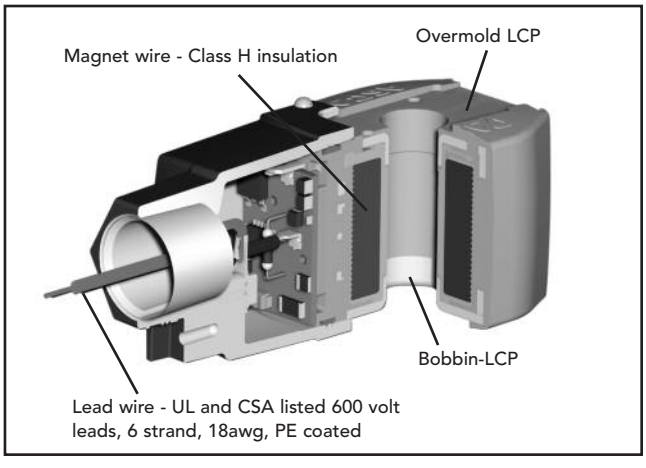

The advanced technology used in the Next Generation coil includes electronic circuitry which may limit the compatibility with certain control system components. The following issues need to be considered when specifying an output card or device to operate the Next Generation coil. An initial inrush current spike is drawn by the Next Generation coil. This inrush spike is 72 msec in duration, which is sufficient time for the core to reach the plugnut. The electrical requirement then drops to the holding value.

Inrush Current: The power source, wiring, and output device used need to have surge ratings equal to or greater than the inrush current value (appropriate to the voltage range) specified in the table below.

Inrush Current Rating	
Coil Version	**Peak Inrush Current (Amps)**
12-24/DC	3.2
24-120/50-60Hz/DC	1.4
100-240/50-60Hz/DC	0.32
Maximum Duration = 72 ms	

Holding Current: The power source, wiring, and output device used need to have continuous current ratings equal to or greater than the holding current value (appropriate to the voltage range) specified in the table below.

Holding Current Rating			
Coil Version	**Input Voltage**	**Average Holding Current (Amps)**	**Average Holding Volt-Amps (VA)**
12-24/DC	12	0.230	2.8
	24	0.190	4.5
24-120/50-60Hz/DC	24	0.140	3.4
	120	0.070	8.8
100-240/50-60Hz/DC	100	0.044	4.4
	240	0.032	7.8

Supervisory/Leakage Currents:
The leakage current is defined as a current that is supplied from an output device when the device is in its off or de-activated state.

The Next Generation coil is suitable for systems using supervisory currents that do not exceed the drop-out currents noted in the table below.

Supervisory/Leakage Current Rating	
Coil Version	**Drop-out Current (mA)**
12-24/DC	20
24-120/50-60Hz/DC	15
100-240/50-60Hz/DC	7
Important: Supervisory and leakage currents above the drop-out current listed with cause improper operation. Consult your local ASCO Sales office for additional assistance.	

Solenoid Enclosures

The Next Generation solenoid coil is fully encapsulated using Dupont™ Zenite® Liquid Crystal Polymer resin (LCP). Zenite (LCP) is a thermoplastic polyester resin which exhibits several advantages over other thermoplastics. The advantages include excellent resistance to a wide range of organic solvents and automotive fluids*, resistance to impact, and long term retention of properties at continuous-use temperatures.

*Chemical resistance of Zenite LCP may not be suitable for all applications. Zenite LCP is not suitable for caustic solution. *Please consult ASCO for appropriate product solutions.*

Zenite is a registered Trademark of Dupont Co.



RedHat Next Generation Solenoids are available as:

General Purpose/Watertight – Intended for indoor and outdoor use and provides protection classifications from NEMA Types 1 through 4X.

Class I, Division 2 for Hazardous Locations/Watertight – Meets Types 1 through 4X and is UL listed and CSA certified for Class I, Division 2, Groups A, B, C, and D and Class II, Division 2, Groups F and G. Operating temperature code T4A (120˚C).

Valve Specifications

Maximum Ambient Temperature

The maximum ambient temperature is 140˚F (60˚C). This limit is based on continuous energization with the maximum fluid temperatures as shown on each catalog page.

Response Time

Response time from fully closed to fully open or vice versa depends on valve size, operating mode, fluids, temperature, inlet pressure, and pressure drop. The response times for Next Generation are defined as:

Small direct acting valves – 10 to 60 msec
Large direct acting valves – 25 to 90 msec

Internally pilot operated valves:

- Small diaphragm types – 20 to 100 msec
- Large diaphragm types – 80 to 150 msec
- Small piston types – 80 to 150 msec
- Large piston types – 105 to 200 msec

Operation on liquids has relatively little effect on small direct acting valves, however, response times of large direct acting and internally piloted valves may be lengthened by 50% to 100%.

Manual Operators

Manual operators are provided to operate the valves manually when electric actuation is not provided. There are two basic types of manual operators, momentary and maintained. To determine which type of manual operator is available for your valves, please see the Optional Features Chart on the relevant valve catalog page. Once it is determined that the subject valve can accommodate a manual operator, the chart below will tell you the type of manual operator. The chart also references the relevant cutaway illustration.

Series Number	Const. Ref.	Manual Operator Suffix	Manual Operator Type	Illustration Number
8030	8	MO	Maintained	3
8210	4, 7, 10, 11, 12	MO	Maintained	2
8262	1	MS	Maintained	6
8263	1	MS	Maintained	6
8314	1	MS	Maintained	6
8316	5, 6	MO	Maintained	2
8320	2	MO	Momentary	1
8320	2	MS	Maintained	6
8321	4	MO	Momentary	1
8321	4	MS	Maintained	3
8344	1, 3, 4	MO	Maintained	2
8345	2	MO	Maintained	5

Cutaway Illustrations

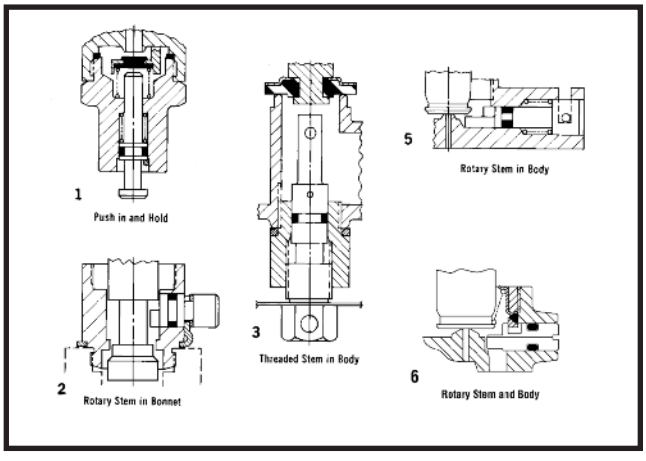

Valve Parts in Contact with Fluids						
Series	**Body**	**Seals and Discs**	**Disc Holder**	**Core Guide**	**Springs**	**Shading Coil**
8030	Brass	NBR	-	-	302 Stainless Steel	Copper
8210	304 Stainless Steel	NBR	-	-	302 Stainless Steel	Silver
	Brass	NBR	①	-	302 Stainless Steel	Copper
8223	304 Stainless Steel	PTFE, NBR	-	-	302 Stainless Steel	Silver
	Brass	NBR, PA, PTFE	-	-	302 Stainless Steel	Copper
8262	304 Stainless Steel	NBR	-	-	302 Stainless Steel	Silver
8262P261	304 Stainless Steel	UR	-	-	302 Stainless Steel	Silver
8262R099	304 Stainless Steel	UR	-	-	302 Stainless Steel	Silver
8262R107	304 Stainless Steel	UR	-	-	302 Stainless Steel	Silver
8262R175	304 Stainless Steel	UR		-	302 Stainless Steel	Silver
8262R178	304 Stainless Steel	UR	-	-	302 Stainless Steel	Silver
8262	Brass	NBR	-	-	302 Stainless Steel	Copper
8262R077	Brass	LT NBR	-	-	Inconel	Copper
8262R078	Brass	LT NBR	-	POM	Inconel	Copper
8263	304 Stainless Steel	NBR	-	-	302 Stainless Steel	Silver
8263	Brass	NBR	-	-	302 Stainless Steel	Copper
8314	304 Stainless Steel	NBR, FKM	-	POM	302 Stainless Steel	Silver
8314	Brass	NBR, FKM	-	POM	302 Stainless Steel	Copper
8316	Brass	NBR	POM	POM	302, 17-7PH Stainless Steels	Copper
8317	Brass	NBR, FKM, CR	-	POM	302, 17-7PH Stainless Steels	Copper
8320	303 Stainless Steel	NBR	POM	POM	302 Stainless Steel	Silver
8320	Brass	NBR	POM	POM	302 Stainless Steel	Copper
8321	Brass	NBR	POM	POM	302 Stainless Steel	Copper
8344	Brass	NBR	POM	POM	302, 17-7PH Stainless Steels	Copper
8345	Brass	NBR, PA	-	POM	302 Stainless Steel	Copper
8551	316 Stainless Steel	NBR, PA	-	POM	302 Stainless Steel	Copper
8551	Anodized Aluminum	NBR, PA	-	POM	302 Stainless Steel	Copper

Note: All core tubes are 305 stainless steel and all cores and plugnuts are 430F stainless steel. ① 8210P033, 8210P034, and 8210P035 with PA Disc Holder