XL Reducing Coupling — P x P



Job Name	
Job Location	
P.O.#	
Engineer	
Contractor	
Wholesaler	
Merit Associate	

Copper Press Large Diameter Reducing Coupling P x P is available in sizes 2½" x 1" – 4" x 3" with an EPDM sealing element.

- **FIRST TO MARKET Visual Indicator Press Ring (VIPR)™** - facilitates immediate identification of un-pressed connections.
- **Leak Before Press (LBP)** - in addition to the VIPR, all sizes have leak before press technology, which guarantees a visual indication if the fitting is not pressed.
- **Applications:** HVAC, plumbing, municipal, mechanical and industrial applications.

XL Reducing Coupling — P x P

Item Number EPDM	D1 (in)	D2 (in)	L (in)	A (in)
MB22290	2½"	1"	4.07	1.40
MB22300	2½"	1¼"	3.90	1.02
MB22310	2½"	1½"	4.17	0.98
MB22320	2½"	2"	3.98	0.63
MB22330	3"	1¼"	4.76	1.61
MB22340	3"	1½"	4.76	1.30
MB22350	3"	2"	4.65	1.02
MB22360	3"	2½"	4.29	0.55
MB22370	4"	2"	5.98	1.97
MB22380	4"	2½"	5.47	1.34
MB22390	4"	3"	5.24	0.83

Copper Press Operational Parameters
EPDM working pressure range from full vacuum to 300 psi for water.

Copper Press Fitting Certifications
ICC-ES LC1002, NSF/ANSI/CAN 61, NSF/ANSI/CAN 372, IAPMO Z 1117.

Copper Press Codes and Standards
ASME B31.1, B31.3, B31.9, IPC, IMC, IRC, UPC, UMC, CPC & CMC, City of Los Angeles Plumbing and Mechanical Codes, Massachusetts Regulation 248 CMR 10.00: Uniform State Plumbing Code, Massachusetts State Building Code 780 CMR Ninth Edition: Chapter 28.

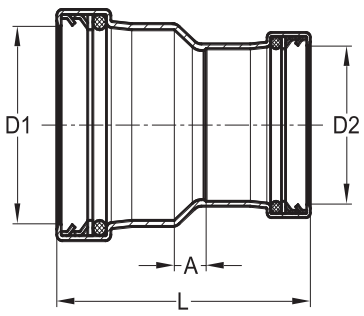

© 2025 Merit Brass Company / MeritPress™. All rights reserved.